Low-Cost Router Upgrade

Table Saw Set-Up — Secrets for the Perfect Cut

Woodsmith®

www.woodsmith.com

Vol. 27 / No. 158

build the ultimate Poker Table

- Easy Bolt-Together Base
- Replaceable Felt Inserts
- Optional Wood Cover

TOP PICKS:

Best Bits FOR PRECISION DRILLING

WORK SMARTER **Belt Sander Solutions**

WOODSMITH EXCLUSIVE: ALL-NEW POKER CHIP STORAGE SYSTEM

A Publication of August Home Publishing

Table of Contents

departments

from our readers
Tips & Techniques 4

all about
Forstner-Style Bits 8
Versatile drill bits you need in your shop.

tools of the trade
Belt Sander 10
We'll show you how to get more out of this essential power tool.

techniques from our shop
Perfect Mitered Frames 12
Take the mystery out of making picture-perfect miter cuts on the table saw.

jigs and fixtures
ONLINE EXTRA video workshop
Router Guide Bushings 14
Find out how to put these simple, inexpensive router accessories to work for you.

tips from our shop
Shop Notebook 30

small shop solutions
Powerful Solutions 42
Sure-fire strategies for "powering" up your shop.

working with tools
Setting up for the Perfect Cut 44
Learn what it takes to get your table saw ready for making accurate cuts.

finishing room
4 Finishing Brushes 46
No matter what the project is, one of these four brushes is sure to have you covered.

in the mailbox
Q & A 48

hardware and supplies
Sources 49

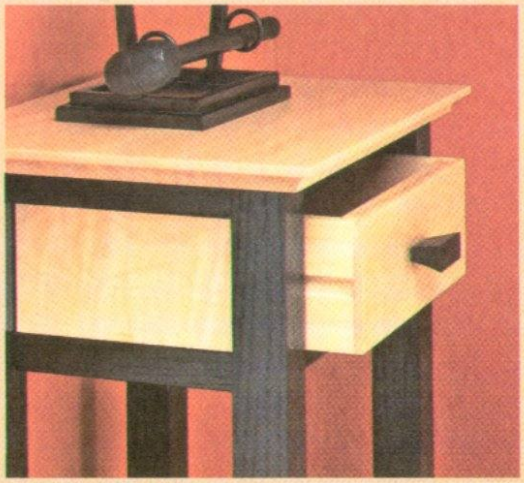

Display Table page 16

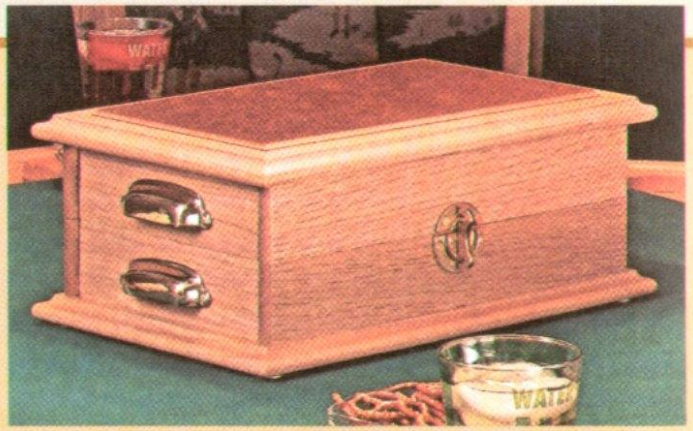

Poker Chip Case page 22

features

designer series project

Display Table 16

The ebonized legs of this table provide a striking contrast to the maple top, shelf, and drawer.

storage project

Poker Chip Case 22

This poker chip case is unlike any other — it features solid-brass hardware, a burl veneer top, and felt-lined chip trays.

heirloom project DESIGNER'S NOTEBOOK

Classic Oak Poker Table 32

With a felt top, chip compartments, and built-in drink coasters, this poker table is a sure bet.

details of craftsmanship Woodsmith GO ONLINE EXTRAS

Inside Look at Pedestal Bases 50

Strong and attractive, pedestal table bases have been used for centuries. Learn the secrets behind their construction.

ONLINE EXTRA video workshop

Woodsmith GO ONLINE EXTRAS

These two symbols let you know there's more information online at www.Woodsmith.com. There you'll see step-by-step videos, technique and project animation, bonus cutting diagrams, and a lot more.

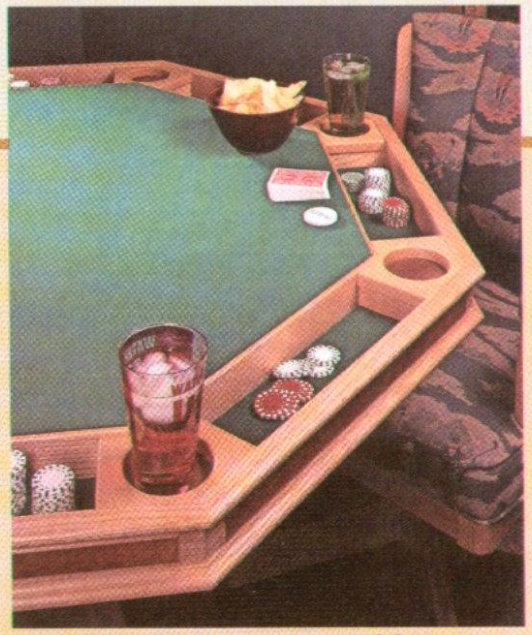

Poker Table page 32

editor's note

Sawdust

There's no question about it — poker is pretty popular right now. All across the country, record numbers of people are playing the game and watching tournaments on television.

To be honest, I'm not a big poker player. Fortunately, Ted Kralicek, our Creative Director, is. So he was eager to try his "hand" at designing a new project for us — a poker table. And he's come up with a poker table design that incorporates several interesting details. But the part I like best is what you don't see.

Let's start with the business end of the table — the top. When you look at the top, you see a rich, luxurious, felt-covered playing surface surrounded by solid oak and fancy veneer. But the truth is, the tabletop is built almost entirely out of inexpensive MDF. The felt and oak are used only on the parts you see — where it matters.

The base of the table is a similar story. It's a traditional-looking, pedestal-style base. But rather than make this base from scratch, we used a bolt-together base that you can purchase. It fits the table perfectly, so once everything is done, no one but you will know the difference. But if you decide you'd rather build the base yourself, take a look at the article on page 50 for more details.

Even if poker isn't your game, be sure and check out the article on perfect mitered frames on page 12. You'll find plenty of tips for getting tight-fitting joints on any woodworking project.

Terry

FREE TIPS BY EMAIL

Now, you can have the best, time-saving secrets, solutions, and techniques sent directly to your computer. Just go to www.Woodsmith.com and click on "FREE Tips by Email" to sign up. You'll receive a new tip by e-mail each week.

Tips & Techniques

Sliding Bench Light

As I get older, I often need just a little more light to see the projects I'm working on, especially when I work at my bench. To make the light easily available, I devised a holder for my lamp so that I can have light anywhere on the bench.

As the photo on the right shows, the lamp holder fits over the back of the tool tray on my bench so the lamp can slide anywhere along the length of the tray (essentially the entire length of my bench).

Detail 'a' below shows the inner lip of the holder is only ¾" deep. This way, as it slides, it doesn't get caught on any objects that are in the tray. The pointed "wings" on each end of the holder soften the edges and also help prevent the assembly from tipping over when you swing the lamp to either side.

The drawing at left shows how a tongue on the lamp holder fits into a notch cut in the wing. To accept the stem of the lamp, I drilled a counterbored hole in the lamp holder. A second counterbore in the bottom of the lamp holder accepts a nut to secure the light to the holder, as shown in detail 'a.' Finally, to allow the power cord to fit through the hole, there's a notch cut at the back of lamp holder.

The key to sizing the wing is to ensure that the space between the inner lip and the back support matches the thickness of the back wall of the tool tray, as in detail 'b.' The fit should be snug enough to hold the lamp upright without wobbling, but still be loose enough for the assembly to move easily along the tray.

Now, I can have sufficient light where it does me the most good. It's just a matter of sliding the lamp into position.

Dave Hickox
Middletown, Connecticut

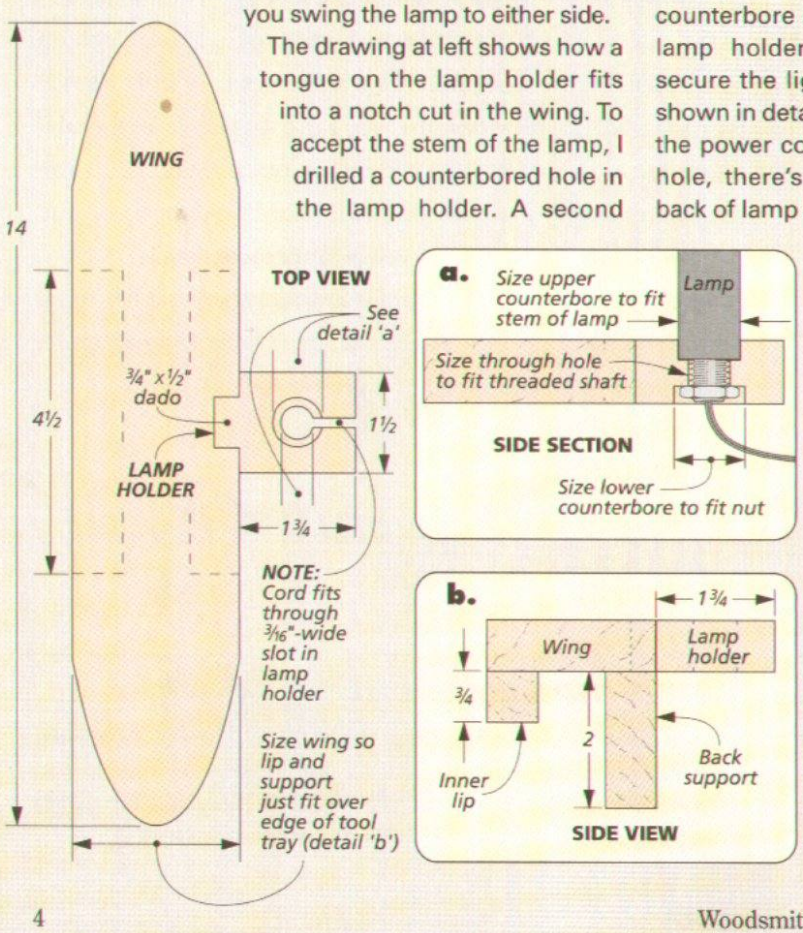

SUBMIT YOUR TIPS

If you have an original shop tip, we would like to hear from you and consider publishing your tip in one or more of our publications. Just write down your tip and mail it to: *Woodsmith,* Tips and Techniques, 2200 Grand Avenue, Des Moines, Iowa 50312. Please include your name, address, and daytime phone number in case we have any questions. If you would like, FAX it to us at 515-282-6741 or send us an email message at: woodsmith@woodsmith.com. We will pay up to $200 if we publish your tip.

Plate Joiner Jig

Sometimes I use my plate joiner to place biscuits into the face of a panel. But I discovered there are two difficulties in doing this. The first problem is making sure that each slot is a consistent distance from the end of the panel. The second problem is preventing the plate joiner from rotating during the cut. To overcome these problems, I built the positioning jig that you see in the drawing and photo below.

The jig consists of a base for the plate joiner to rest against and a sliding arm with a lip that hooks over the end of the workpiece. In the drawing below, you can see that the base is a three-sided plywood box with a bottom. A groove in the box bottom holds a length of T-track. The sliding arm attaches to the fence with a flange bolt, washer, and knob.

The sliding arm for my jig is only 5½" long. But you can make it longer, depending on your needs. You could even make several arms for use with the same base. The arm needs to fit snugly to hold the jig in position without shifting.

To use the jig, set the sliding arm so that the blade is aligned along the layout line and tighten the knob. Then hold the jig in place with your hand or leg and make the cut, as you see in the photo below.

Elizabeth Friedrich
San Diego, California

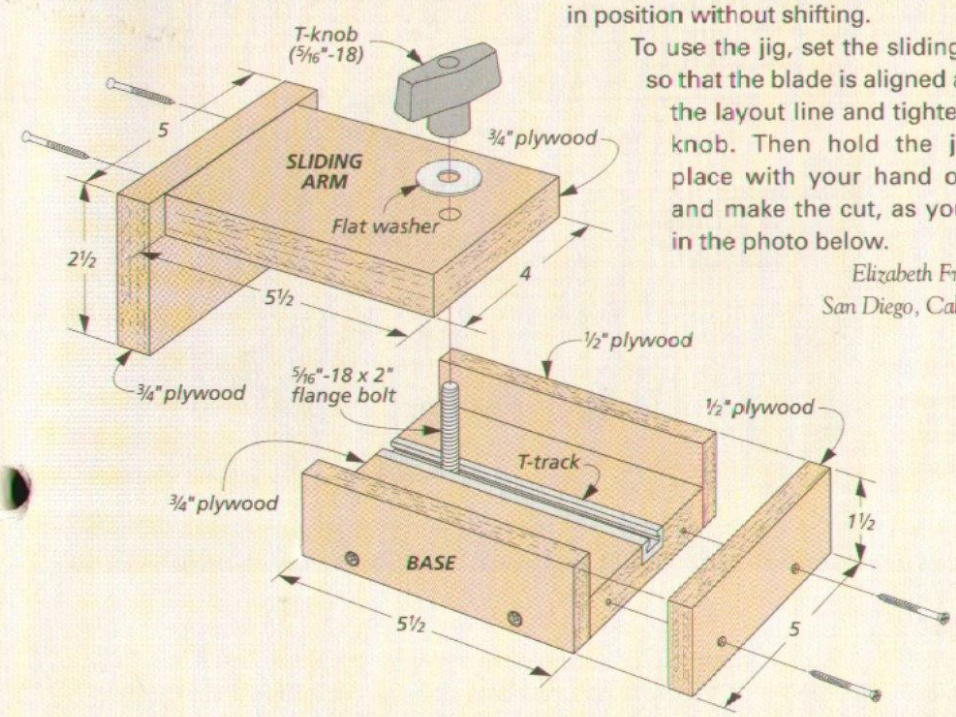

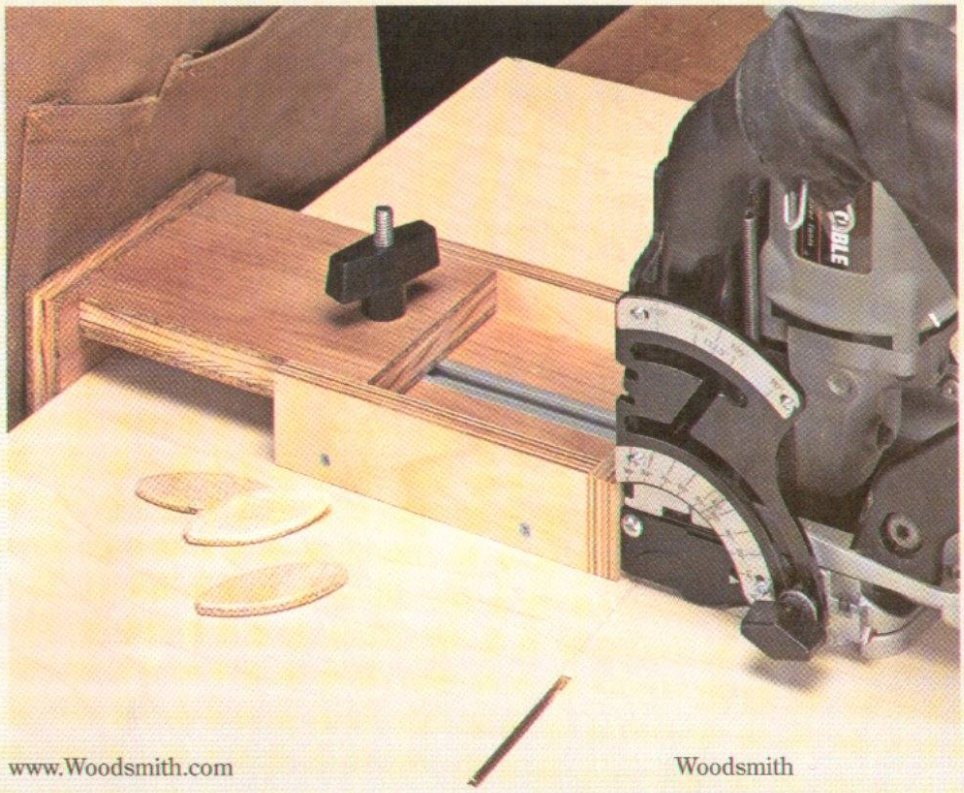

Woodsmith

No. 158 April/May 2005

PUBLISHER Donald B. Peschke

EDITOR Terry J. Strohman
SENIOR EDITORS Vincent Ancona, Bryan Nelson
ASSOCIATE EDITORS Phil Huber, Ted Raife
ASSISTANT EDITORS Ron Johnson, Mitch Holmes

EXECUTIVE ART DIRECTOR Todd Lambirth
SENIOR ILLUSTRATORS David Kreyling, Dirk Ver Steeg, Harlan V. Clark
ILLUSTRATORS David Kallemyn, Peter J. Larson

CREATIVE DIRECTOR Ted Kralicek
SENIOR PROJECT DESIGNERS Ken Munkel, Kent Welsh, Chris Fitch
SHOP CRAFTSMEN Steve Curtis, Steve Johnson
SR. PHOTOGRAPHERS Crayola England, Dennis Kennedy
ASSOCIATE STYLE DIRECTOR Rebecca Cunningham
ELECTRONIC IMAGE SPECIALIST Allan Ruhnke

CORPORATE SERVICES: *Corp. Vice Presidents:* Douglas L. Hicks, Mary R. Scheve • *Controller:* Craig Stille • *Dir. Financial Analysis:* Lesia Smith • *Sr. Acct.:* Laura J. Thomas • *Accts. Payable:* Mary J. Schultz • *Accts. Receivable:* Margo Petrus • *Prod. Dir.:* George Chmielarz • *IT Manager:* Brian VanHeuverswyn • *Electronic Pub. Dir.:* Douglas M. Lidster • *Sys. Admin.:* Cris Schwanebeck • *P.C. Maint. Tech.:* Robert D. Cook • *Multimedia Archivist:* Scott Nollen • *New Media Mgr.:* Gordon C. Gaippe • *Multimedia Art Dir.:* Eugene Pedersen • *Web Server Admin.:* Carol Schoeppler • *Web Content Mgr.:* David Briggs • *Multi-media Designer:* Kara Pastour, Justin Gruca • *Web Prod.:* Terry Walker • *Research Coord.:* Nicholas A. Jaeger • *Prof. Dev. Dir.:* Michal Sigel • *Benefits Spec.:* Jennifer Huisman • *Hiring Spec.:* Jessica Tesar • *Facilities Mgr.:* Kurt Johnson • *Office Mgr.:* Jeanne Johnson • *Admin. Asst.:* Brandi Hammond • *Mail Room Clerk:* Lou Webber **CIRCULATION:** *Circ. Oper. Dir.:* Sandy Baum • *Circ. Marketing Dir.:* Wayde J. Klingbeil • *Strategic Business Analyst:* Kris Schlemmer. • *Circ. Marketing Analyst:* Patrick Walsh • *Renewal Mgr.:* Paige Rogers • *Circ. Marketing Assoc.:* Christine Forret • *Circ. Mgr.:* Stephanie Forinash • *Circ. Fulfillment Mgr.:* Suzanne Hejkal • *Sr. Graphic Designers:* Robin Friend, Randy Shebek **PRODUCTS GROUP:** *Oper. Dir.:* Bob Baker • *Customer Service Mgr.:* Jennie Enos • *Warehouse Supervisor:* Nancy Johnson • *Buyer:* Linda Jones • *Asst. Buyer:* Nancy Downey • *Snr. Cust. Serv. Reps.:* Anna Cox, April Revell, Deborah Rich, Valerie Jo Riley • *Cust. Serv. Reps.:* Kim Harlan, Katie Parker, Tara Benshoof • *Warehouse Staff:* Sylvia Carey, Kim Freauff, Stephen Griffin

Woodsmith® (ISSN 0164-4114) is published bimonthly (Feb., Apr., June, Aug., Oct., Dec.) by August Home Publishing Company, 2200 Grand, Des Moines, IA 50312.

Woodsmith® is a registered trademark of August Home Publishing.
Copyright© 2005 August Home Publishing Company. All rights reserved.

Subscriptions: Single copy: $4.95. One year subscription (6 issues), $24.95. (Canada/International add $10 per year, U.S. funds.)
Canadian Subscriptions: Canada Post Agreement No. 40038201. Send change of address information to PO Box 881, Station Main, Markham, ON L3P 8M6. Canada BN 84597 5473 RT
Periodicals Postage Paid at Des Moines, IA and at additional offices. USPS/Perry-Judd's Heartland Division Automatable Poly.
Postmaster: Send change of address to *Woodsmith*, Box 37112, Boone, IA 50037-2112.
Subscription Questions? Write to *Woodsmith*, P.O. Box 842, Des Moines, IA 50304 or call 1-800-333-5075, 8:00 am to 5:00 pm, Central Time, weekdays. Or send an email to: orders@woodsmith.com
Email: woodsmith@woodsmith.com
World Wide Web: http://www.Woodsmith.com

Online Customer Service.
www.Woodsmith.com
- Access your account
- Check a subscription payment
- Tell us if you've missed an issue
- Change your mailing or email address
- Renew your subscription
- Pay your bill

Email: woodsmith@woodsmith.com
Write to *Woodsmith*, P.O. Box 842, Des Moines, IA 50304-9961 or call 1-800-333-5075, 8:00 am to 5:00 pm, Central Time, weekdays. Or send an email to: orders@woodsmith.com

AUGUST HOME PUBLISHING COMPANY Printed in U.S.A.

Suspended Vacuum Hose

The vacuum hose I attach to my router is about 15' long and using it has always been a problem. The hose often gets tangled in the power cords for my router as well as other power cords lying around on the floor. Or I end up stepping on it and getting it tangled around my feet.

The photo on the right shows the solution I came up with. First, I threaded a cable through a pulley and suspended the cable between two sturdy hooks screwed into my shop ceiling. I then inserted an "S" hook through the pulley eye and loosely attached the hose to the "S" hook with a nylon tie wrap. This allows me to take the hose down when I'm not using it.

Now, when I plug the vacuum hose into my router and move around the workpiece, the hose and pulley ride along the cable, keeping everything up out of the way.

Dan Meier
Herndon, Virginia

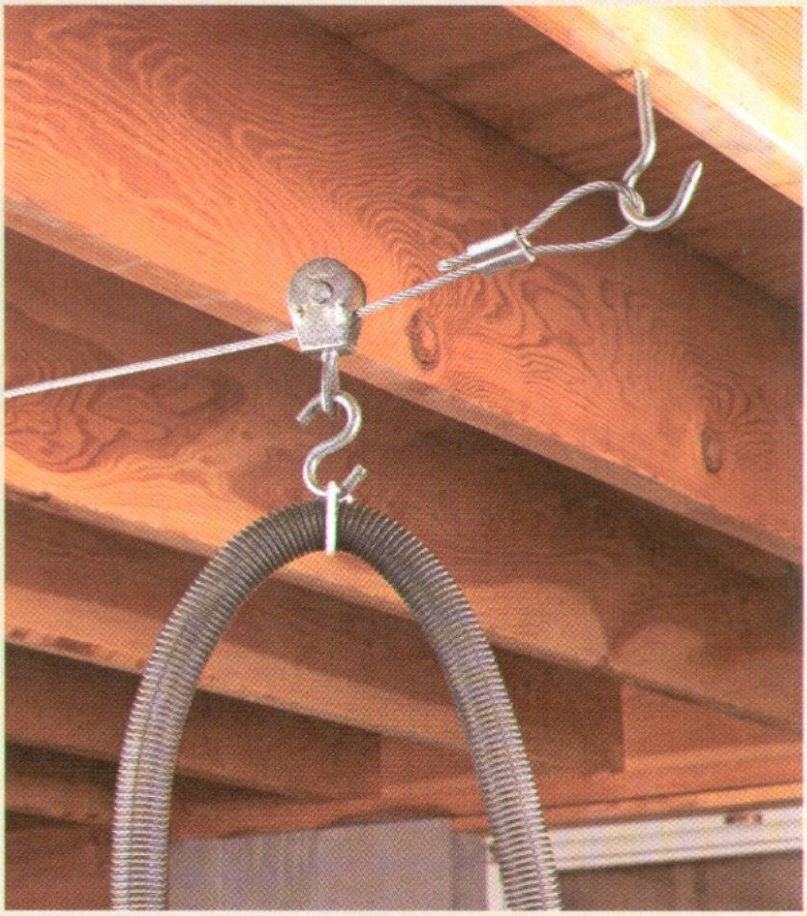

Band Saw Tire Changer

Reading the question in issue No. 155 about changing the tire on a band saw reminded me of a different method I use to change the tire on my band saw. The method I use pre-stretches the tire before putting it on the rim and prevents any pinched fingers.

The key to this technique is a plywood base and a handful of nails. If you take a look at the drawing below, you'll see how it works. I use the wheel from the band saw as a pattern to trace a circle ½" larger all around onto a double layer of ¾" plywood. Then I drill holes just large enough to accommodate 10D common nails on the outside edge of the circle. The nails will hold the fully stretched tire, so they should fit snugly.

To install a new tire on the wheel, I start by fitting a few nails into the holes and placing the tire around them. Continue adding more nails and stretching the tire until the circle is complete.

Once the tire is fully stretched, I place the wheel inside the circle of nails. Then remove the nails one by one until the tire is completely on the rim and ready to go back on the band saw.

Charles Bowen
Newnan, Georgia

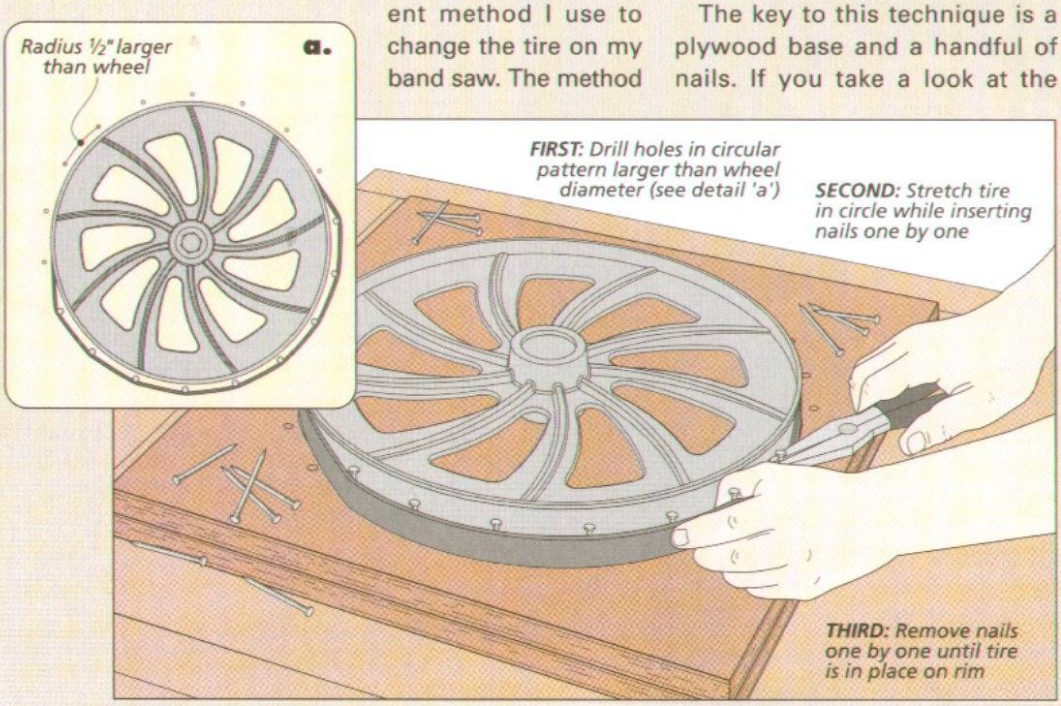

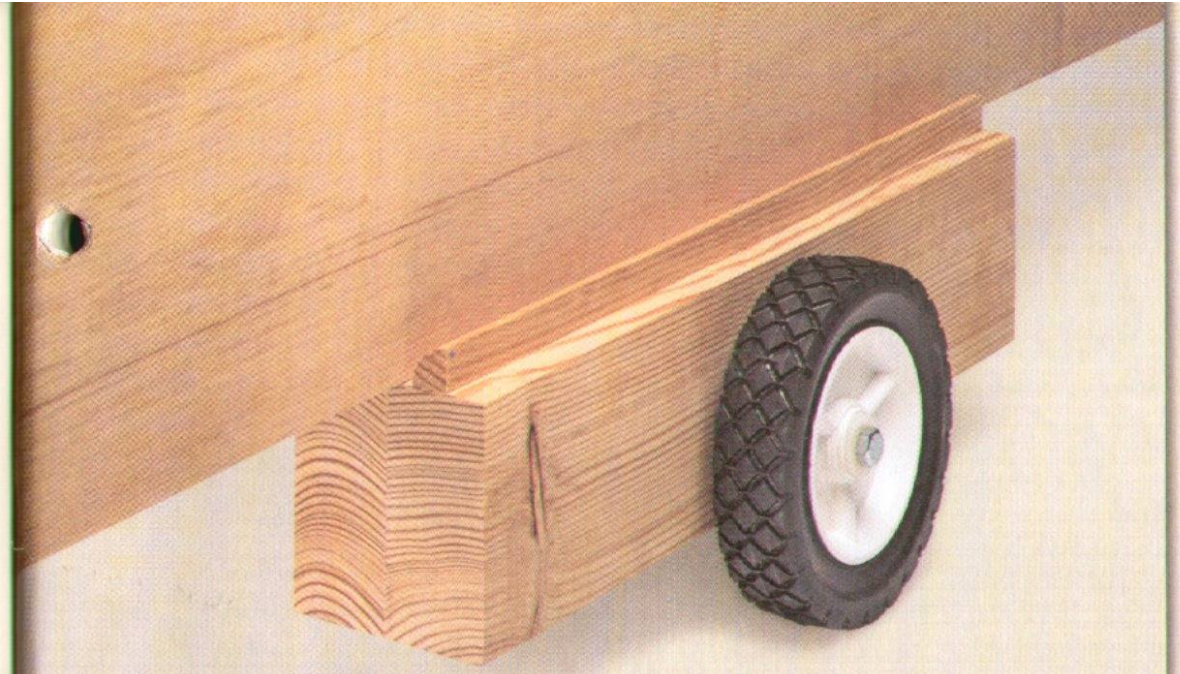

Sheet Goods Dolly

In my younger days as a building contractor, I always kept a plywood tote (as described in issue 155) in my truck for handling 4x8 sheets of plywood and siding materials without a helper. These days, a sheet of plywood or MDF seems a whole lot heavier. So I devised a dolly to help me handle sheet goods all by myself.

The "rough terrain" dolly pictured above is normally used to help me move sheet goods from my truck to my shop or the jobsite. By using lawnmower wheels, this dolly allows one person to move those heavy sheet goods across open areas of grass and dirt.

The drawing at right shows how simple the dolly is to make. I simply glued some scrap lumber together and then cut it to final length. After adding a pair of cleats to hold a piece of plywood or MDF in place, just bolt the lawnmower wheels to the sides.

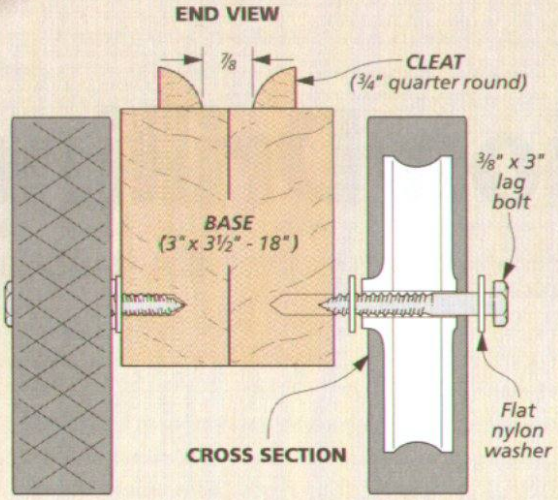

When using the dolly, just make sure to position the dolly in the middle of your plywood or MDF to maintain the best control. With the assistance of my dolly, I can easily move 4x8 sheets of plywood or MDF anywhere I need to by myself.

Elmer Rosemann
Collierville, Tennessee

Quick Tips

TEMPLATES FOR DOVETAILS

The problem with laying out hand-cut dovetails is there's no way of checking the accuracy until the two parts are assembled.

The solution I use is to make paper patterns of both faces of the pin board after I cut the pins. Then I use an *X-Acto* knife and a steel ruler to cut along the inside edge of the pencil line. When I finish, I have a pattern that fits exactly over my pins. The template can then be attached to the tail board to make a perfect-fitting cut.

John Murray
Northumberland, Pennsylvania

DRESSMAKER'S PIN

Removing the backing off of double-stick tape can be frustrating. But there's a simple solution.

Get a dressmaker's pin with a knob on the end. Then just prick the corner of the backing at a low angle and gently lift. This will be the cheapest tool in your shop.

Joe Kopp
Oak Ridge, Tennessee

FINISHING SUPPORT

Finding a support for "wet" finish pieces is often a problem. I found that pushing small brads or finish nails into a piece of corrugated cardboard provides a great non-marking support.

Richard Servis
Kalamazoo, Michigan

Win This Porter-Cable Variable Speed Router

That's right, send us your shop tips. If your tip or technique is selected as the featured reader's tip, you'll win a Porter-Cable variable speed router just like the one shown here. Send your tips and techniques to: *Woodsmith,* Tips and Techniques, 2200 Grand Avenue, Des Moines, Iowa 50312. Or send us an email message at: woodsmith@woodsmith.com.

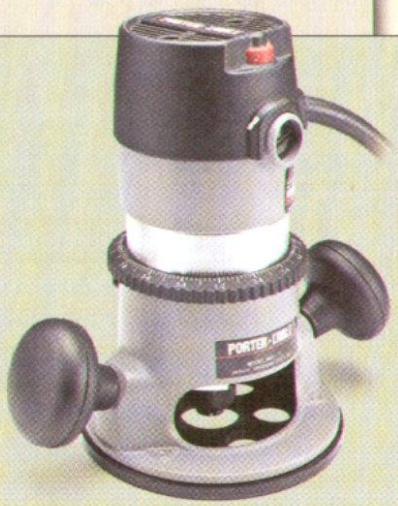

The Winner!

Congratulations to Elizabeth Friedrich of San Diego, California. Her plate joiner jig was selected as the winner of the Porter-Cable router. Her jig helps make accurate and repetitive cuts into the faces of boards and sheet goods.

To find out how you could win a Porter-Cable variable speed router, check out the information on the left.

all about

perfect bits for

Precision Drilling

When it comes to drilling smooth, precise holes, these Forstner-style bits are the most versatile ones you can own.

I have drawer full of drill bits in my shop. But when I want to bore precise, flat-bottomed holes, there's only one bit I reach for — a Forstner bit. Actually, there are four types of Forstner bit. And all of them will drill precise holes. While each has a few unique features and uses, they all cut with the same principle.

As the bit is lowered into the workpiece, an outer rim scores the edges of the hole. Then, a set of horizontal lifters slice through the wood like the blade of a hand plane to remove the waste in long, curly shavings (photo above).

Since Forstner bits are guided by the rim and not the centerpoint, they can do things other bits can't. For example, drilling overlapping holes. A few other uses are shown in the box on the opposite page. Knowing a little about each style will help you choose which bits you need in your shop.

TRUE FORSTNER. True Forstner bits are descended from the original bit first designed in 1886. And there's only one company that still makes them, CONVALCO. To find out where to get them, turn to page 49.

What makes them special is how they're made. True Forstners are milled from a solid blank and sharpened by hand. This attention to detail results in a perfectly balanced and razor-sharp bit. In fact, these bits cut with no chatter and seem to melt the wood.

Another interesting feature of this type of bit is the centerpoint. If you look closely at this bit you'll notice that it has a small nub for a centerpoint. This means true Forstners bore the flattest bottom holes, as you can see in the photo on the top of the opposite page.

It sounds like these are the perfect bits, right? Well, yes and no. All this precision comes at a price. True Forstners can cost several times more than the other types. For example, the 1⅝"-dia. bit shown at left costs about $47 (plus shipping). But if you're looking for dead-on accuracy and the cleanest holes, these are the perfect bits for you.

MACHINED FORSTNER. At first glance, a machined Forstner-style bit doesn't look much different than a true Forstner. But if you take a look at the lower photo at left, you can see a few differences. First, they have a larger centerpoint and a notch in the rim. Another noticeable difference is the rough-grinding around the rim of the bit.

The big advantage of this type of bit is cost. These bits are cast and then sharpened by machine. This automation and simpler manufacturing reduces the cost, but still makes for a fairly smooth-cutting bit.

You'll find the quality of these bits can vary between manufacturers. But overall, they make pretty good all-purpose bits.

True Forstner

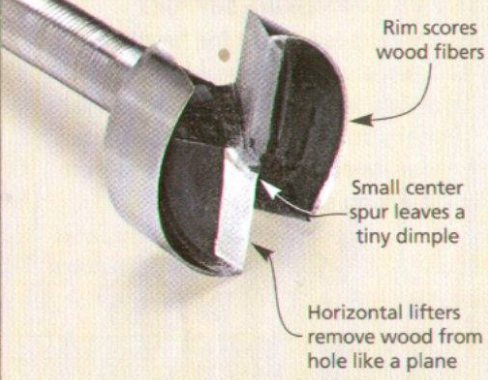

Machined Forstner-style

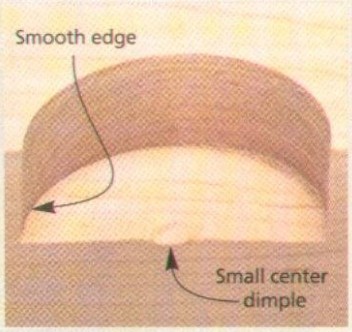

▲ ***True Forstner.*** A small center "nub" and sharp lifters make a smooth, flat-bottomed hole with minimal centerpoint.

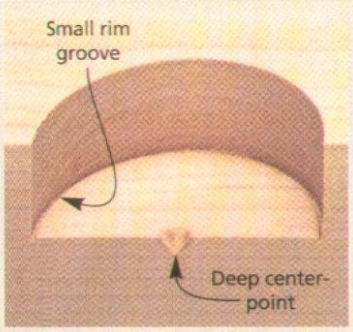

▲ ***Machined Forstner.*** The large centerpoint of the bit leaves a noticeable depression in the center of the hole.

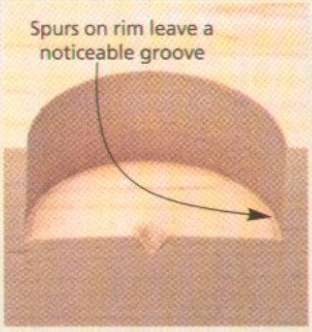

▲ ***Multi-Spur.*** Saw tooth-like spurs along the rim leave a groove along the bottom edge of the hole.

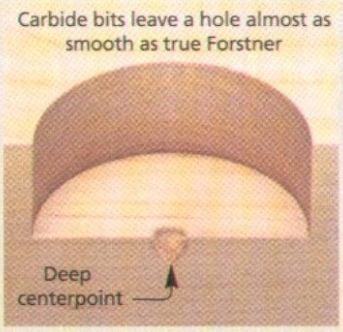

▲ ***Carbide.*** Carbide's durability makes it good for use on hard materials. But it leaves a deep centerpoint depression.

HYBRID BITS

The next two bits in my inventory look quite a bit different from the other Forstner bits. And while I may not use them every day, these bits come in handy for some tasks.

MULTI-SPUR FORSTNER. The first thing you'll notice about these bits is the rim. Instead of a single cutting edge, mulit-spur bits have a serrated rim. These spurs work a lot like the teeth on a saw blade to cut fast and quickly remove chips.

I've found these bits to be relatively inexpensive. I use the larger sizes for drilling big holes, like those for clock movements.

CARBIDE. The newest bit in my collection isn't really a Forstner at all. What sets this bit apart are the carbide cutting edges. The bit shown in the photo at left doesn't have a scoring rim. Instead, it uses a pair of carbide teeth to do the job.

So why have a carbide-tipped drill bit? First of all, these bits will hold their edge much longer and than similar steel bits. This makes them perfect for high-volume, production-type drilling. The downside is they're not quite as sharp as the other bits. So it takes a little more effort to drill the hole.

But the reason I have a few of these bits around is for boring holes in manufactured materials like MDF and particleboard. These abrasive materials can wear down regular steel bits relatively quickly.

WATCH YOUR SPEED. Regardless of the type of Forstner bits, I've found there's really only one thing to keep in mind when using them — speed. All Forstner-style bits cut best at slow speeds. And the bigger the bit, the slower the speed. The chart below gives you some recommended drill press speeds. W

Forstner-Style Bits: How to Use Them

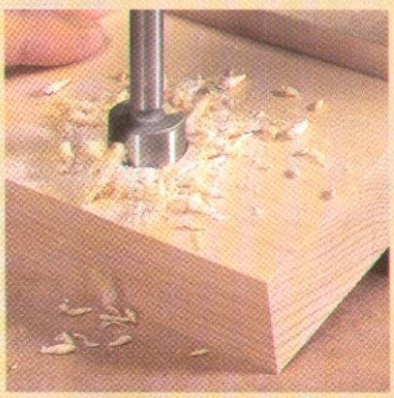

▲ Forstner-style bits are guided by the rim and not the centerpoint. This means you can use them to drill angled holes without worrying about the bit wandering.

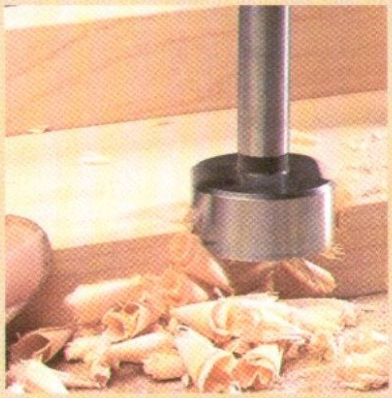

▲ Sometimes you need just one half of the hole. To do this, simply locate the bit at the desired position. Hold the workpiece firmly and then you can drill the hole.

Recommended Speeds Forstner-Style Bits

Bit Diameter	Maximum RPM
Hardwoods	
1/4" – 3/8"	700
1/2" – 1"	500
1 1/8" – 2"	250
Softwoods	
1/4" – 5/8"	2400
3/4" – 1"	1500
1 1/8" – 1 1/4"	1500
1 3/8" – 2"	500

getting the most from your Belt Sander

If you think belt sanders are only good for rough work, you might want to take a closer look at what they can really do.

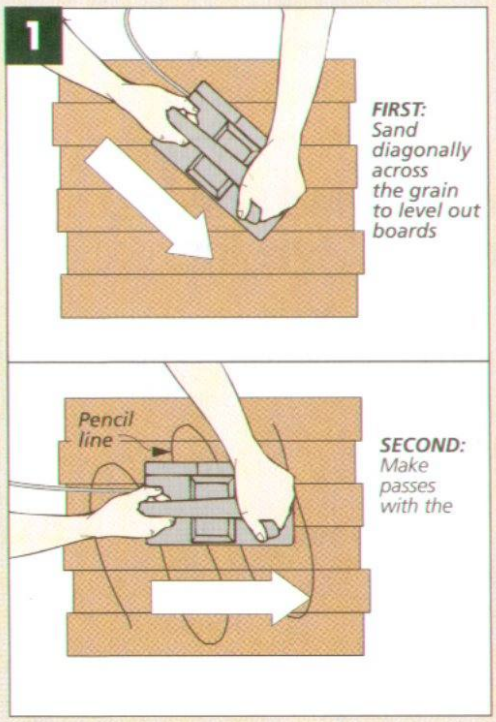

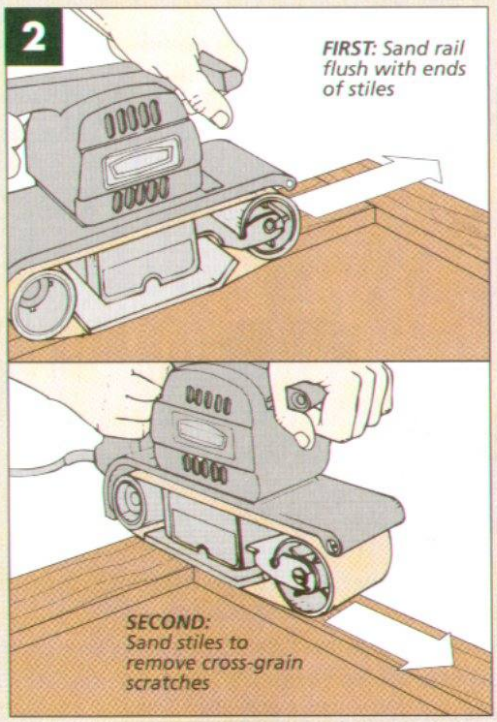

Years ago, I knew a trim carpenter who wielded a belt sander with the same skill that a sculptor might handle a chisel and a mallet. He used it to sand perfect-fitting miters, scribe the back edge of a countertop to an uneven wall, and trim down doors so they fit their openings perfectly. Watching him work made me realize what a useful tool a belt sander can be — not only on a job-site, but in the shop as well.

VERSATILE. Belt sanders have a couple of things going for them. First, they remove stock very quickly, making them a great tool for leveling a surface or reducing the thickness of a work-piece. And second, belt sanders are portable, allowing you to use them freehand as a shaping tool.

But these same qualities also make belt sanders a little intimidating to use. Because they remove stock so quickly,

and you have to guide the tool by hand, it's easy to sand a divot in a workpiece, or blast right through the face veneer on a piece of plywood. So it's helpful to know a few techniques and accessories to make belt sanding a little more foolproof.

TECHNIQUES

Let's start with some basic belt sanding techniques. The first thing to do is relax and let the sander do the work. Instead of bearing down on the sander, I concentrate on guiding it, letting the weight and speed of the sander work to my advantage. (This is why I prefer a heavy sander when I'm sanding flat, horizontal surfaces.)

To avoid burning the workpiece or sanding too deep in one spot, be sure to keep the belt sander moving over the entire surface of the workpiece.

Starting and stopping the sander seem to be where most people get into trouble. That's because it's easy to tip the sander to one side or the other as you lower it down on or raise it up off the workpiece, creating a gouge in the surface of the wood. To avoid this, try to set the sander down gently, as if you were bringing it in for a landing.

Unlike a lot of other tools, using a belt sander takes a little practice. But once you get the hang of it, you'll find all sorts of uses for it in your shop.

APPLICATIONS

I probably use my belt sander for flattening glued-up panels more than anything else. And the trick to doing this quickly and accurately is grain direction. To rapidly bring all the boards to the same height, I sand diagonally *across* the grain of the panel first (see top drawing in Fig. 1). This flattens out all the boards in the panel.

Then to level out the entire surface and make it perfectly flat, I sand *with* the grain (see lower drawing in Fig. 1). This time though, I draw a pencil line back and forth across the board. The pencil line serves as a guide as you're sanding. It disappears from the high spots first, letting you know that these are the areas where you need to spend more time sanding. Once all the pencil marks are gone, the panel should be nice and flat.

RAIL & STILE. Another thing that I commonly use my belt sander for is creating flush rail and stile joints. The challenge here is to sand the rails and stiles flush with each other even though the grain is running in opposing directions.

To do this, I sand the rails first, sanding across the grain at the ends of the stiles. Then to remove the cross-grain scratches at the ends of the stiles, I come back and sand the stiles only, staying just shy of the jointline where the rail meets the stile (Fig. 2).

EDGING. I also like to use my belt sander to sand hardwood edging flush with a plywood panel. You have to be careful here since it's easy to sand through the face veneer of the plywood.

To avoid this, I scribble a pencil line on the plywood, an inch or two away from the edge. Then I place the belt sander directly over the edging and start to sand it flush. When the sander starts removing the pencil line on the panel, I stop sanding with the belt sander and switch to a hand sanding block.

ACCESSORIES

One way to improve the performance of your belt sander is through the use of accessories. Many belt sander manufacturers offer a selection of accessories for specific models of sanders to make them more versatile.

These range from dust collector hook-ups to stands that allow you to mount your belt sander upside-down on a bench, turning it into a mini-stationary sander. You can learn more about a couple of these accessories by taking a look at the box at right. W

Belt Sander: Upgrades

Replacing the metal platen of your belt sander with a graphite platen will keep your sanding belts running cooler and with less friction. The graphite platen material comes in rolls and is simply cut to length with a utility knife, as you see above. Then the original metal platen is used as a template to lay out the screw holes in the graphite platen. Finally, the graphite can be screwed in place. (See page 49 for sources.)

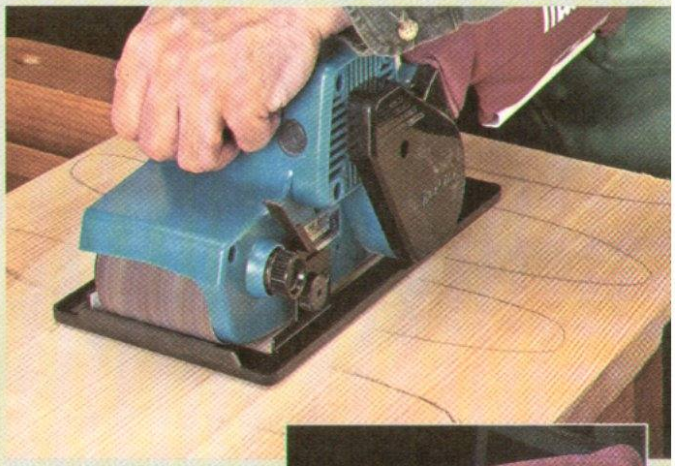

A sanding frame (also known as a sanding shoe) allows you to flatten panels effortlessly. The frame acts like a stablilizer, keeping the sander level with the surface and preventing it from removing too much material in any one spot. Most sanding frames have adjustments that allow you to control the sanding depth. Check with the manufacturer of your sander to see if a sanding frame is available for your model of belt sander.

perfect Mitered Frames

Making a tight-fitting and accurately sized mitered frame doesn't have to be a matter of luck. With the right routine, it's a sure bet.

Making a mitered frame is a pretty common task in my shop. The eight-sided frames for the poker table on page 32 are a good example. And like most work in the shop, I've found that getting good results is as simple as taking the right approach. In a word, the key to perfect mitered frames is a consistent routine.

The octagonal frames built for the poker table have eight pieces that need to be cut to the exact same length and a whopping 16 miter cuts that need to be cut perfectly accurate. A couple of miscuts can throw the whole thing off. So whether I'm making octagonal, square, or rectangular mitered frames, I always follow the same basic routine to ensure that the job will turn out right.

CONSISTENT PIECES

The first thing I always take care of is making certain that the stock is accurately cut to width and has perfectly straight edges. This makes everything that follows go a lot easier. And the reasons are simple.

It's a plain fact that if the pieces you're mitering aren't the same width, the two faces of the joint won't match up. And a straight edge to work from is a must. On occasion, I've cut what I thought was a perfect miter, only to have the joint not fit well. It turned out that the edge I was using to check the miter angle wasn't straight. At the end of the workpiece it looked good, but over the length of the piece, it wasn't quite true.

Step One on the opposite page shows how to get off on the right foot. What it comes down to is that the shorter the workpiece, the more likely you are to end up with a piece that's straight and of accurate width. So first, cut all the pieces to rough length and width. Then, I make sure I have a straight edge to work from. Now, it's just a matter of ripping all the workpieces to a consistent width.

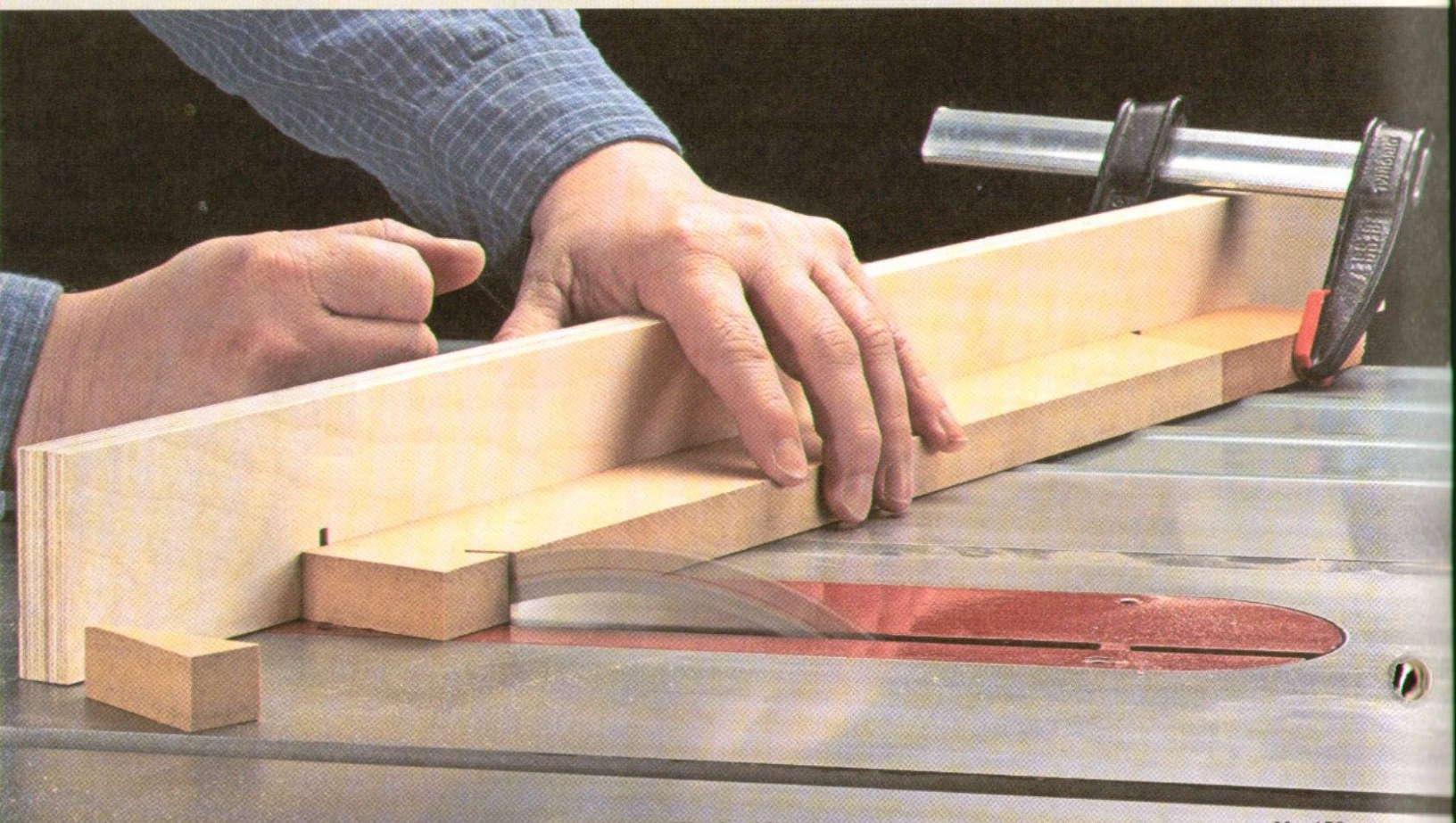

SET UP THE SAW

Properly prepared workpieces are a good start. But you're not quite ready to start making miter cuts. Before I get to this, I take care of some important setup chores.

AUXILIARY FENCE. First, if you don't already have one in place, install an auxiliary fence on the miter gauge. This gives you a stable surface to support the workpieces. And to get a cleaner cut, I always position the auxiliary fence so that it backs up the cut as shown in Step Two.

SET THE ANGLE. Now, you can set the miter gauge to the angle you need (22½° in the case of the eight-sided frames for the poker table). And this is something that needs to be "on the money." Since each joint involves two miter cuts, any little error is doubled in the assembled joint. So a test cut to check the angle comes next.

A 45° angle is easy enough to check with a good combination square. But to check for an accurate 22½° angle, I have a different method shown in detail 'a' of Step Two. Cut a couple of test pieces and then use a drafting square or the head of a combination square to see if you're on target. Don't be tempted to move on until you're sure the angle is perfect.

FIRST CUTS

The key from here on out is repetition. Once everything on the saw is set up the way you want it, each cut is made in exactly the same way.

Start by cutting a miter on one end of each workpiece as shown in Step Three. And even though it's not necessary to cut all the pieces to the same length at this point, I like to install a stop block on the miter gauge (detail 'a').

I've found even when I grip the workpiece so tightly against the fence my fingers start to ache, it can still slip during the cut. So why take the chance? A stop block gives you another solid surface to hold the workpiece firmly against and a "creeping" workpiece won't be a problem.

Once you're set up, it's a simple assembly line process. Push the miter gauge and workpiece past the blade and then set the workpiece aside before pulling the miter gauge back for the next cut.

FINAL CUTS

At this point, I have everything set up so that the second miter cut should go without a hitch. But there's one important thing you need to keep in mind. For your miters to fit tightly and your frame to end up the right size, the lengths of the pieces need to be dead-on accurate and identical. So that's your focus for these final cuts.

MEASURE ONCE. You only need to measure and mark the final length you want on one workpiece. This piece is used to make your first cut and set a stop block for the remaining cuts.

ANGLED STOP BLOCK. If you take a look at detail 'a' of Step Four, you'll see that I use a different type of stop block for the final cut. The sharp point of the miter on the end of each workpiece won't give you good support against a square stop block. The point of the miter can easily slide between the block and the fence or be crushed by pushing it a little too hard against the stop block. The solution is to use a notched miter cutoff for a stop block. This will give you support all along the face of the mitered end.

I set the stop block so the first cut on the measured piece will be a bit shy of my mark. Then you can sneak up on the final length, moving the stop block as you go. When you hit the mark on the first workpiece, you can go ahead and cut the other pieces to the exact same length. Just make sure you hold the workpieces snug against the notched stop block with no dust or debris in between.

Once the final miter is cut on each piece, the moment of truth has arrived. When you get out a web clamp and pull all the pieces into a perfect-fitting frame, it's a pretty satisfying feeling. W

4 Steps to Perfect Frames

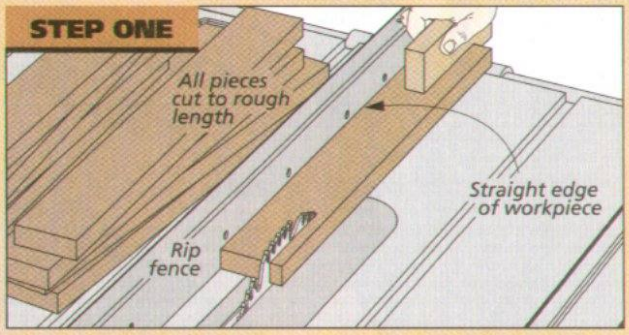

Consistent Pieces. *To get the best results, you need to start with accurately sized stock. All the workpieces need to have straight edges and be ripped to the same width.*

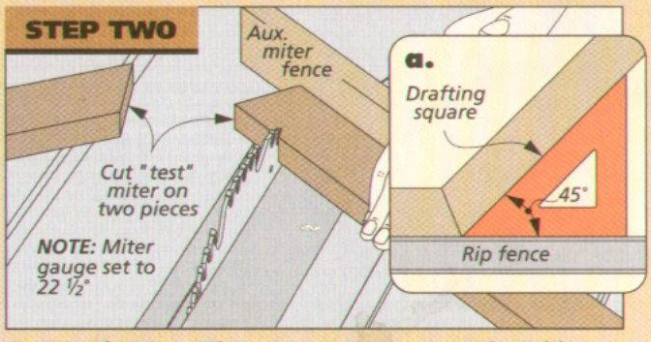

Set Up the Saw. *The next step is to set up the table saw for the miter cuts and make a couple test cuts to check the angle. The detail drawing shows how to check a 22½° angle.*

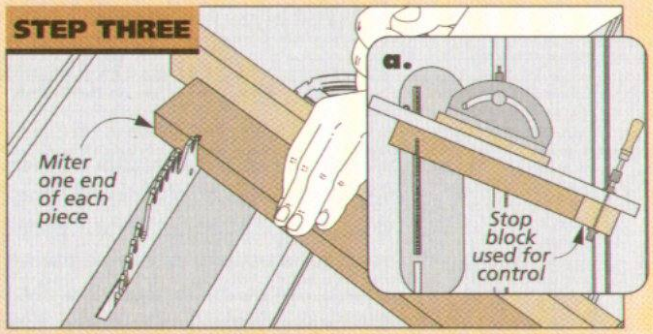

First Cuts. *When the setup of the saw checks out, you can start the mitering process by making a cut across one end of each workpiece. The stop block just helps with control.*

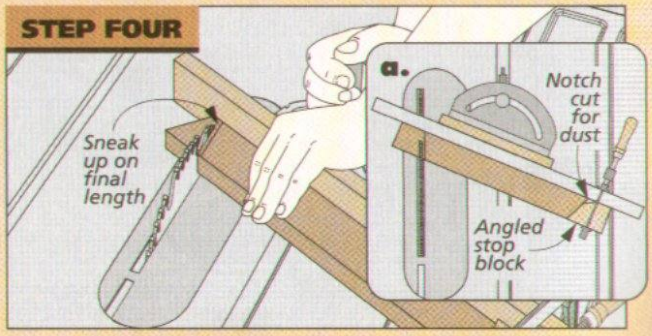

Final Cuts. *To make the second cut on each workpiece, use an angled stop block. Use the first piece to sneak up on the finished length and set the stop for the remaining pieces.*

putting router Guide Bushings to work in your shop

To view a video of how to use router guide bushings, go to: www.Woodsmith.com

ONLINE EXTRA
video workshop

For the money, you won't find a more versatile or easy-to-use hand-held router accessory.

I like to think of router guide bushings as problem solvers. Whether it's making multiple, identical parts, routing mortises, or even creating sliding dovetails, there are usually a few ways to do it. But lately, I've been turning to guide bushings to tackle these tasks. With a simple template and a guide bushing installed on your router baseplate, you can transform an ordinary bit into a precision tool to get prefect cuts.

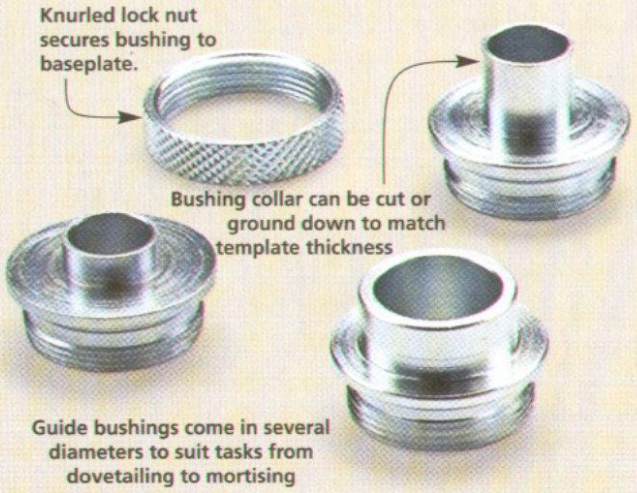

Guide bushings come in several diameters to suit tasks from dovetailing to mortising

WHAT THEY ARE. As router accessories go, guide bushings are pretty simple. They consist of two parts — a bushing that fits in the baseplate of your router and a knurled nut to hold it in place, as in the photo at left.

This style of bushing is used in many routers. But if your router doesn't accept these bushings, you may be able to get an adapter.

Whatever style of bushing your router uses, they all work on the same principle. Once installed in the baseplate of your router, the guide bushing follows along the edge of a template or straightedge guide to steer the bit.

In the photo at left, you can see that bushings come in a wide variety of diameters and lengths to suit a number of tasks. Some are designed for dovetail or sign making jigs. Others are used for routing stair treads or mortises.

USING GUIDE BUSHINGS

Guide bushings are pretty straightforward to use. But to get the most out of them, there are a few things you'll want to keep in mind.

THE GUIDE BUSHING. The first thing to look at in using guide bushings is the bushing itself. And the most important characteristic to know about the guide bushing is the offset.

Since the bushing is larger than the bit, the edge of the template will be offset from the final cut line, as you can see in the upper drawing on the opposite page. The amount of

offset depends on the difference in size between the bit and bushing you're using. But don't worry, there's an easy way to figure this out.

To determine the offset, start by subtracting the router bit size from the outside diameter of the guide bushing. Next, divide that number in half. This is the offset (detail 'a').

Knowing the offset is important for creating the template. The lower drawing at right shows how the template size is affected by the offset.

For example, in routing a hinge mortise like you see in the main photo, I used a 5/8" O.D. bushing with a 1/4" straight bit. This left me with a 3/16" offset. This means that the template is larger than the hinge mortise by 3/16" on each side.

There's another thing to be aware of when it comes to the guide bushing. That's the length of the bushing. For most templates, I use 1/4" hardboard. The problem is the bushing may be longer than 1/4".

If this is the case, the bushing will contact the workpiece, leading to an inconsistent cut. There are two ways around this. First, you can use thicker template stock. The other way is to modify the bushing by grinding or cutting it shorter. Here, I've found brass bushings, as shown in the box below, easier to modify.

THE TEMPLATE. The second thing to look at is the template. Because the guide bushing travels along the edge of the template, it a has big impact on the quality of the cut. You'll want to take extra care in making the template and smoothing its edges. Any roughness in the template will be transferred to the workpiece by the guide bushing and bit.

When it comes to making templates, I use hardboard or MDF. The reason is both materials are easy to shape, stable, and free of voids. To keep the guide bushing moving smoothly around the template, I apply a little wax to the edges.

THE WORKPIECE. The final piece to the puzzle is the workpiece itself. Now it would seem that all you need to do is simply attach the template and get to work. And in some cases, that will work just fine. But I like to remove excess waste before routing. Removing a lot of material can make the router work too hard. Just be sure to stay to the waste side of the cut lines (drawing above).

After these three parts of the process are taken care of, you're ready to start routing. And you can be confident that the results will be perfect every time.

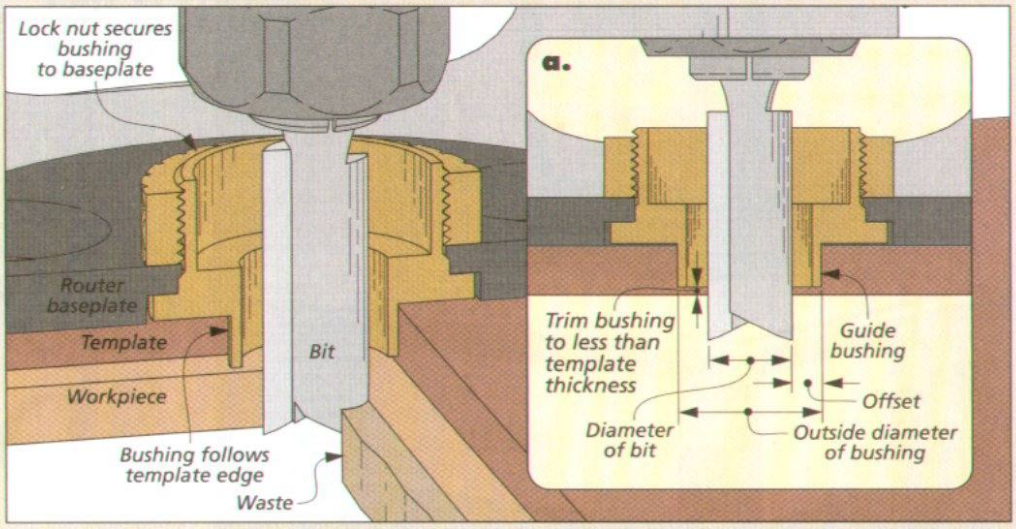

Finding the Offset. *To determine the offset of a bushing and bit combination, subtract the bit diameter from the outside diameter of the bushing. Then divide that number in half.*

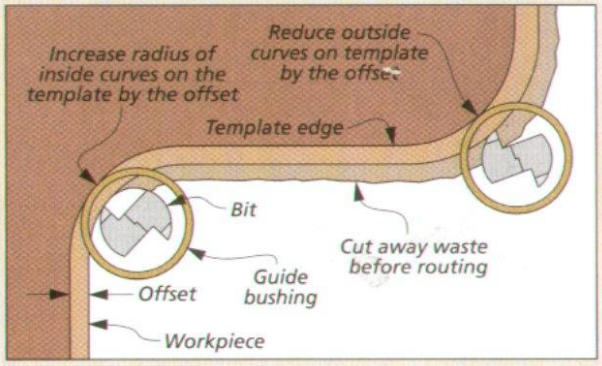

Making the Template. *Once you have the offset in hand, you can use it to size the template accurately.*

Sets: Brass Guide Bushings

Most of the guide bushings and sets you'll find are made of steel. And while they work just fine, you may want to consider getting a brass guide bushing set.

Brass bushing sets cost about the same as a steel set. But they offer a couple of advantages over steel bushings.

First of all, like I mentioned above, the length of the bushings may be longer than the thickness of the template stock. I've found it's much easier to trim the length of a brass bushing with a hacksaw to match your template. The second advantage is that the soft brass won't damage carbide router bits.

The set shown here is made by *Amana* and comes with seven common bushing sizes. There's also a baseplate adapter that allows most routers to accept the bushings. The set also includes two lock nuts so that you can have two routers set up at the same time. To find out where you can get these sets, turn to page 49.

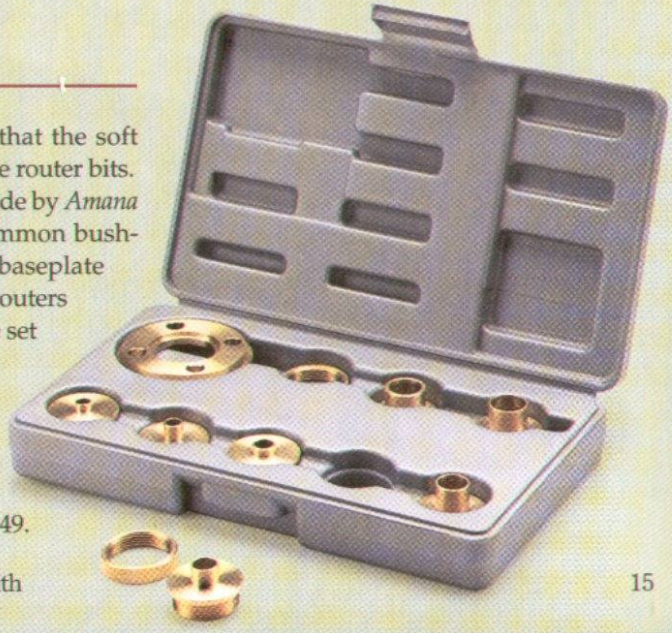

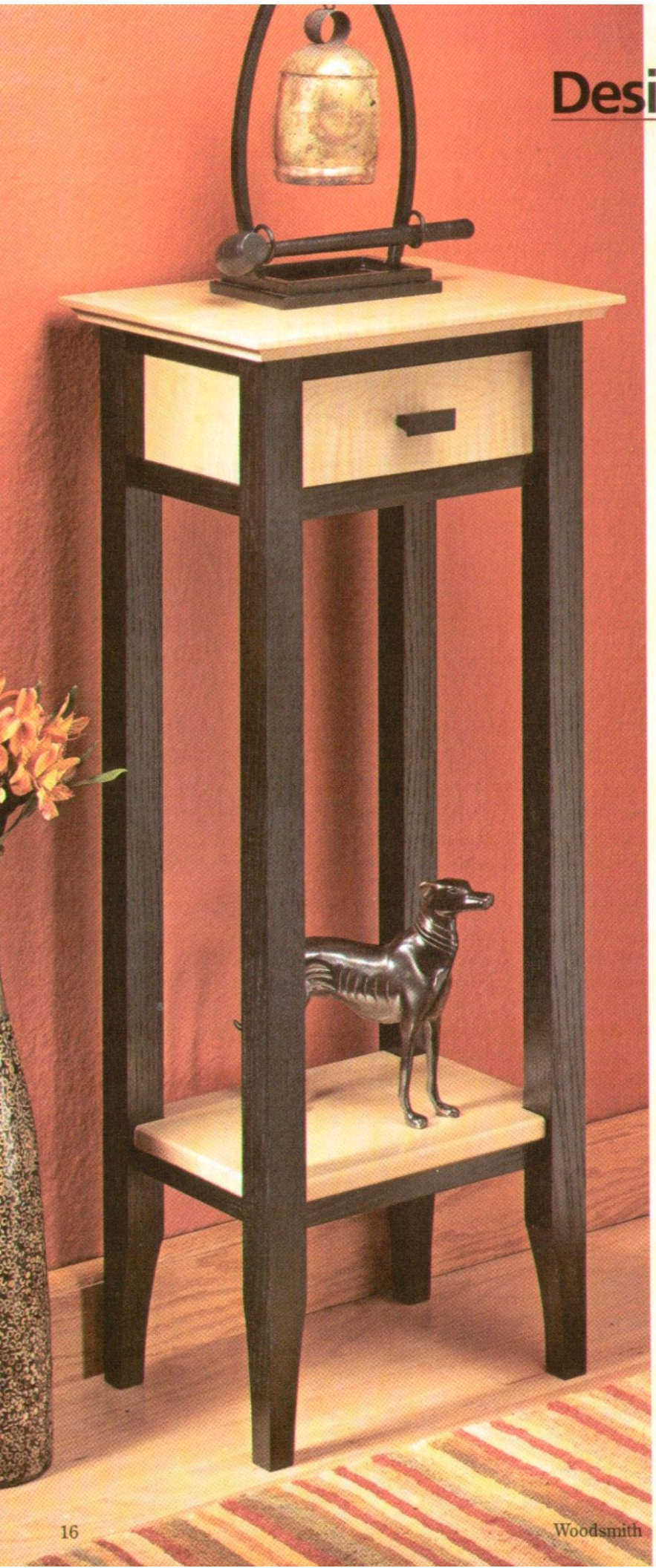

ebonized Display Table

Contrasting woods and clean lines make this table as interesting to look at as it is to build.

Wow. That's the reaction I heard when I brought this table out of the shop. The curly maple panels and the jet-black legs make this small table a project that really stands out. But what I find more interesting are the techniques used to build it.

Let's start with the legs. At first glance they may appear painted — but they're not. They've been *ebonized*. All this means is staining an inexpensive wood (in this case, red oak) to look like ebony.

Now typically, I stain a project after it's assembled. But trying to keep the stain off the maple panels would have been difficult, if not impossible. We designed this table so the outer "skeleton" can be built and stained. Then the maple panels are dropped in place and the entire project is just screwed together. It couldn't be simpler.

GETTING STARTED. To make the table, I started with the legs. The legs will hold three web frames and the panels of the drawer assembly. And even though the legs are only 1½" thick, I decided to glue them up out of two pieces of ¾"-thick stock. This way, you can cut all the necessary notches and grooves on the table saw before gluing up the legs, rather than trying to chisel them out after assembly (see main drawing on the next page).

In the How-To box on the opposite page, you'll see how I cut the notches and grooves into one half of each leg. I cut the notches first, using an auxil-

iary fence on my miter gauge to prevent chipout and a stop block to ensure that all the notches lined up.

The notches are identical on all four legs. But that's not the case with the grooves. Each leg is slightly different. The back legs get two grooves each, while the front legs only get one. And the left-hand legs are different than the right-hand legs, as you can see in details 'a' and 'b.'

GLUE-UP TECHNIQUE. Once you've finished making all the notches and grooves, you can glue up the legs. An important thing to remember is that the leg blanks were cut to their final length at the beginning. So when you glue them together, you'll need to keep the edges and ends flush. And you'll want to pay attention to the drawing at right to make sure that you keep the leg blanks oriented properly during the glue-up process.

To prevent the pieces from slipping while clamping them up, I drove a couple brads part way into one half of each leg. Then I snipped off the heads of the brads. When the clamps are applied, the brads bite into the other half of the leg, keeping it from shifting.

Once the glue is dry, you can lighten the look of the legs by cutting a gentle curve on the inside faces of each leg (see the Leg Pattern drawing on the far right).

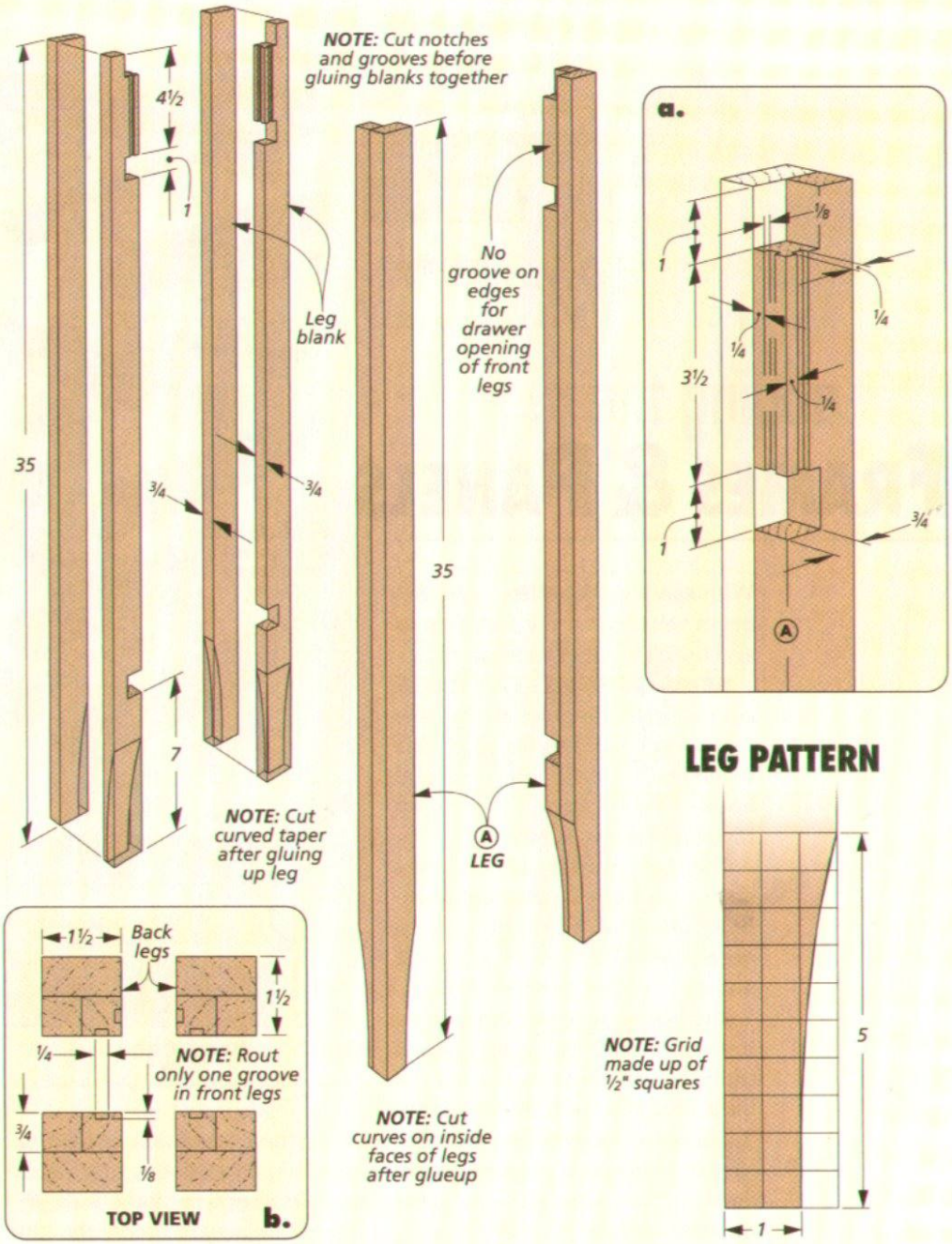

How-To: Notches and Grooves

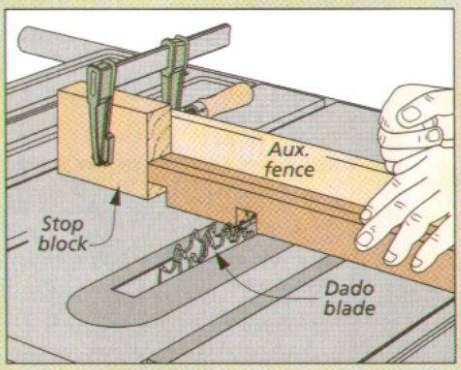

Cutting the Notches. *Use your dado blade to cut the 1"-wide notches in the legs. Stacking the leg blanks together speeds things up a little, plus ensures identical cuts.*

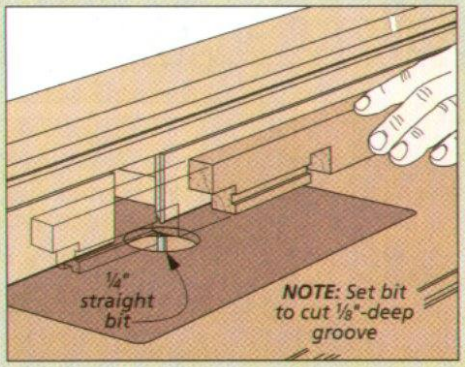

Routing the Grooves. *The grooves are routed on the router table. Make sure to pay attention to the orientation of each leg as you rout the grooves.*

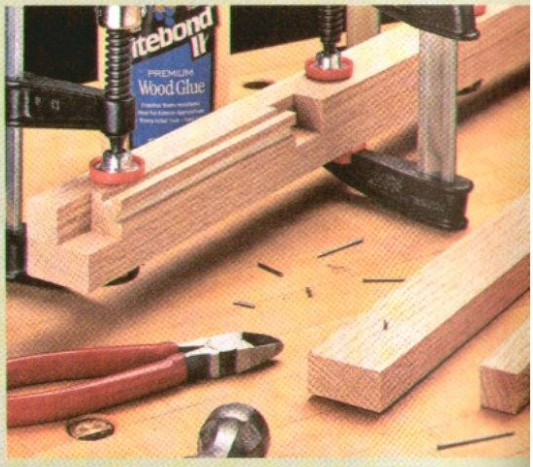

Glue Them Up. *To prevent the two halves of the leg from slipping during glueup, I drove some brads into the inside face of one half and then snipped the heads off.*

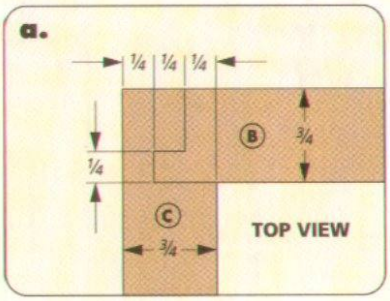

adding the FRAMES & PANELS

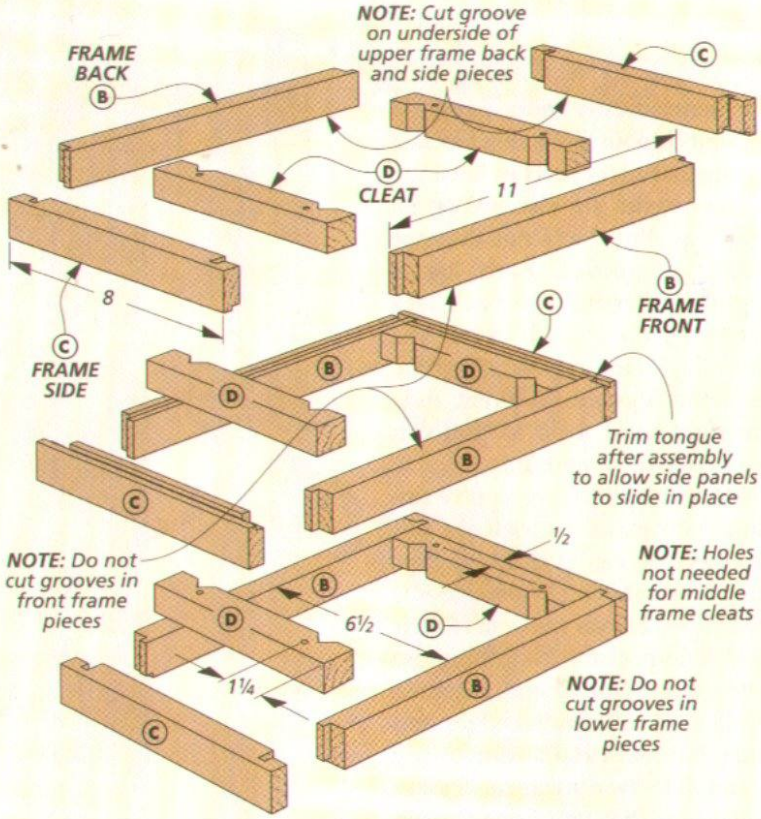

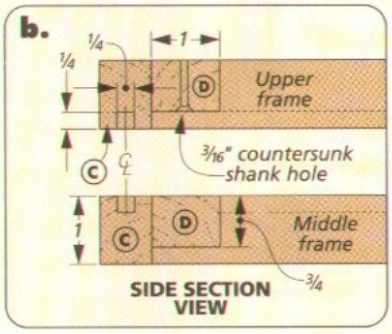

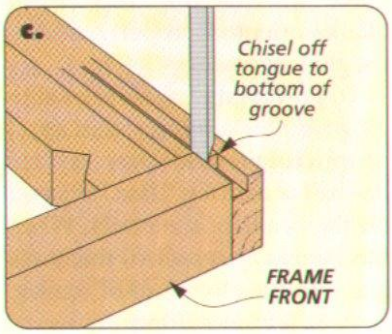

With the legs complete, you can begin working on the web frames and the panels that connect them.

BUILDING THE FRAMES. The frames come first. They're really the "skeleton" that holds the table together. The top two frames will house the drawer, and the bottom frame will support the shelf.

The main drawing on this page shows the three frames are essentially identical. The frame pieces are assembled using simple tongue and dado joinery (see detail 'a').

But before you put the frames together, you'll need to cut grooves in the top two frames to hold the back and side panels (see detail 'b'). You can cut these on your table saw, but I like to use a straight bit and my router table because I have more control and get a cleaner cut.

When you're ready to assemble the frames, apply glue to the tongue and dado joints and then clamp them up. To make the final assembly go smoother, it's a good idea to check to make sure the frames are square before the glue dries. An easy way to do this is to measure across the frame diagonally, in both directions.

If those measurements are the same, you know the frame is square. If those measurements aren't equal, adjust your clamps until they do match.

You'll also want to make sure the frames stay flat during the glueup,

How-To: Details for angled screws

I made a guide to help me keep the screw holes centered in the cleat notches. If your drill bit isn't long enough to drill all the way through, drill as far as you can with the guide, then remove it and finish drilling the rest of the way.

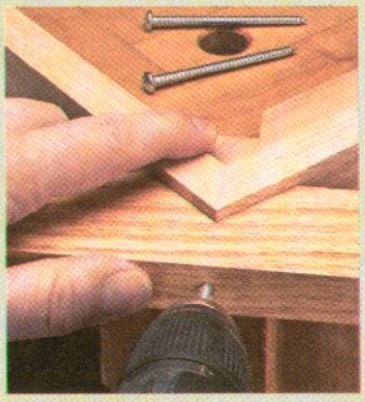

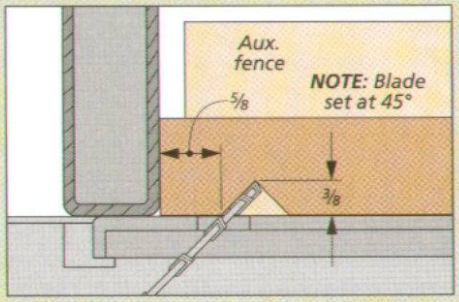

Cutting the Notches. *To provide a flat spot for the screwheads to seat against, cut notches in the cleats.*

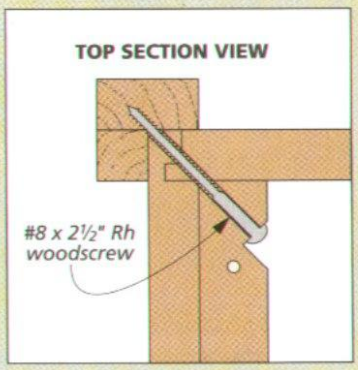

Shank Hole. *You'll need to drill shank holes for the long screws that hold the frames to the legs.*

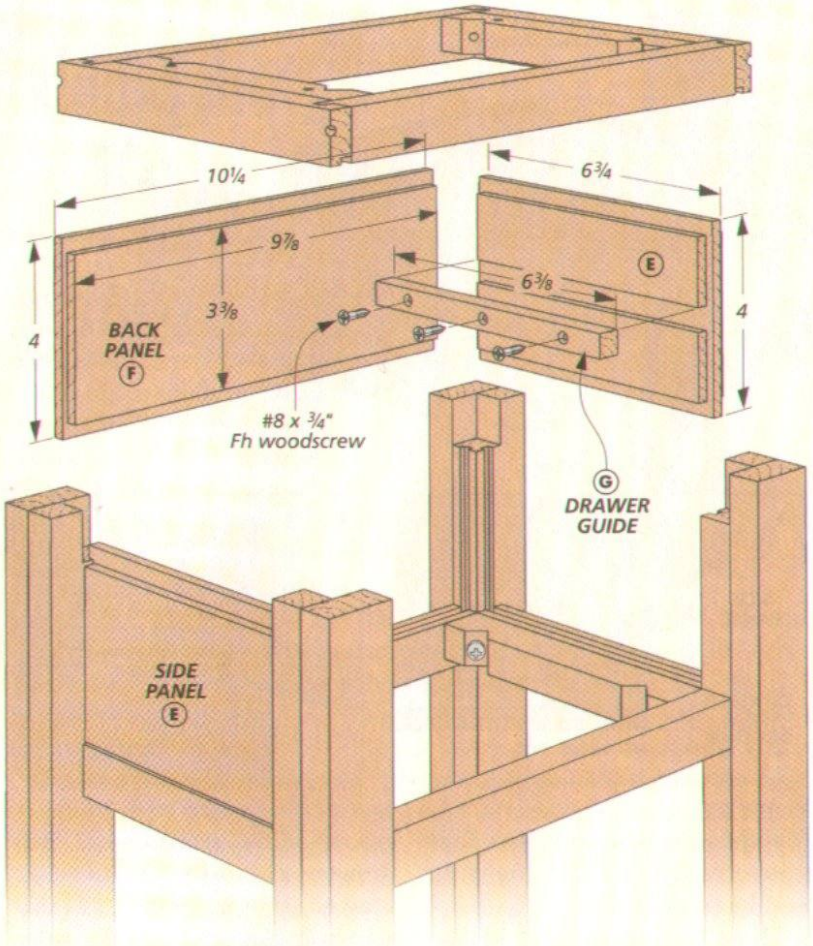

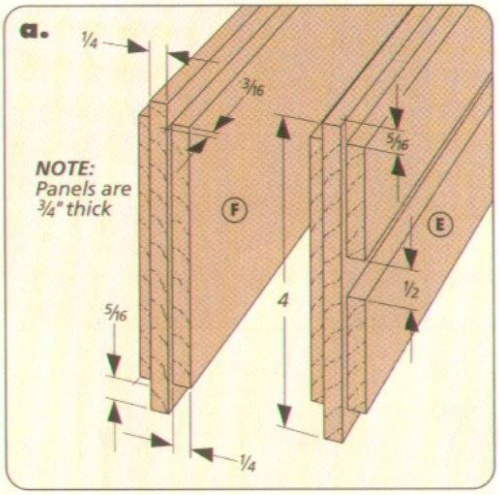

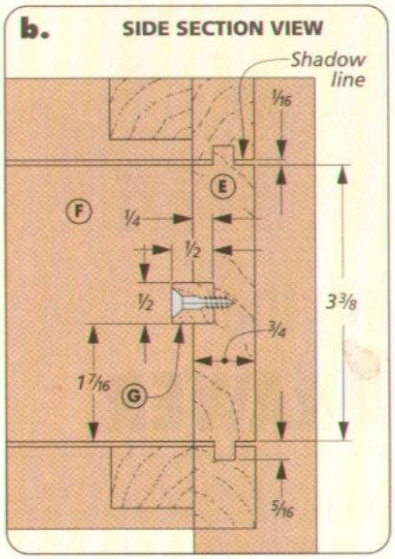

or you'll have a difficult time attaching them to the table legs.

If you peek into the grooves in the top two frames, you'll see part of the tongues of the frame fronts and backs poking through. Just chisel those out so the panels will fit (see detail 'c' on page 18).

THE CLEATS. Now it's time to add the notched cleats to the insides of the frames. The cleats play a pretty important role in the table. They allow you to attach the frames to the top, shelf, and legs of the table.

Once the cleats were cut to size, I cut notches in them to create spots for the screws that will attach the legs to the frames (see How-To box on opposite page). These notches will make it easy to drive the long screws at an angle.

Because the screws will go through the frame joinery on their way to the legs, I felt like I needed to protect the joints from being forced apart by the screws. The photo in the How-To box on page 18 shows how I pre-drilled the holes in the corners of the frames.

At this point, I also drilledthe holes in the top and bottom cleats that will hold the top and the shelf. Then I attached the cleats to the frames and assembled the legs and the two lower web frames. This table is designed to be disassembled when you get to the ink-stain finishing process, so you don't want to add glue during this part of the assembly. And you don't want to attach the top frame just yet, because the panels for the drawer assembly need to be inserted first.

THE PANELS. As you see in the main drawing above, the edges of the panels are rabbeted to create tongues that fit into the grooves cut earlier in the legs and frames. The length of the tongues, shown in detail 'a,' is designed so they "bottom out" in the grooves of the legs and frames. This will leave a thin shadow line around each panel, as you can see illustrated in detail 'b.'

But don't get too carried away when cutting the tongues on the edges of the panels. The grooves in the frames are deeper than the grooves in the legs. A look at detail 'a' shows that the top and bottom tongues of each panel are different than the tongues on the ends.

DRAWER GUIDES. Before installing the panels and the top frame, I cut a centered groove on the inside face of each side panel to hold a drawer guide. I then cut the drawer guides to fit and glued and screwed them into place (detail 'b').

Now the panels are ready for their test fit. Slide the panels into the grooves, but don't force them — snug is what you're looking for. If the panels seem too tight, just remove them and sand the tongues a little. Once you've got a good fit, screw in the top frame and get ready to build the drawer.

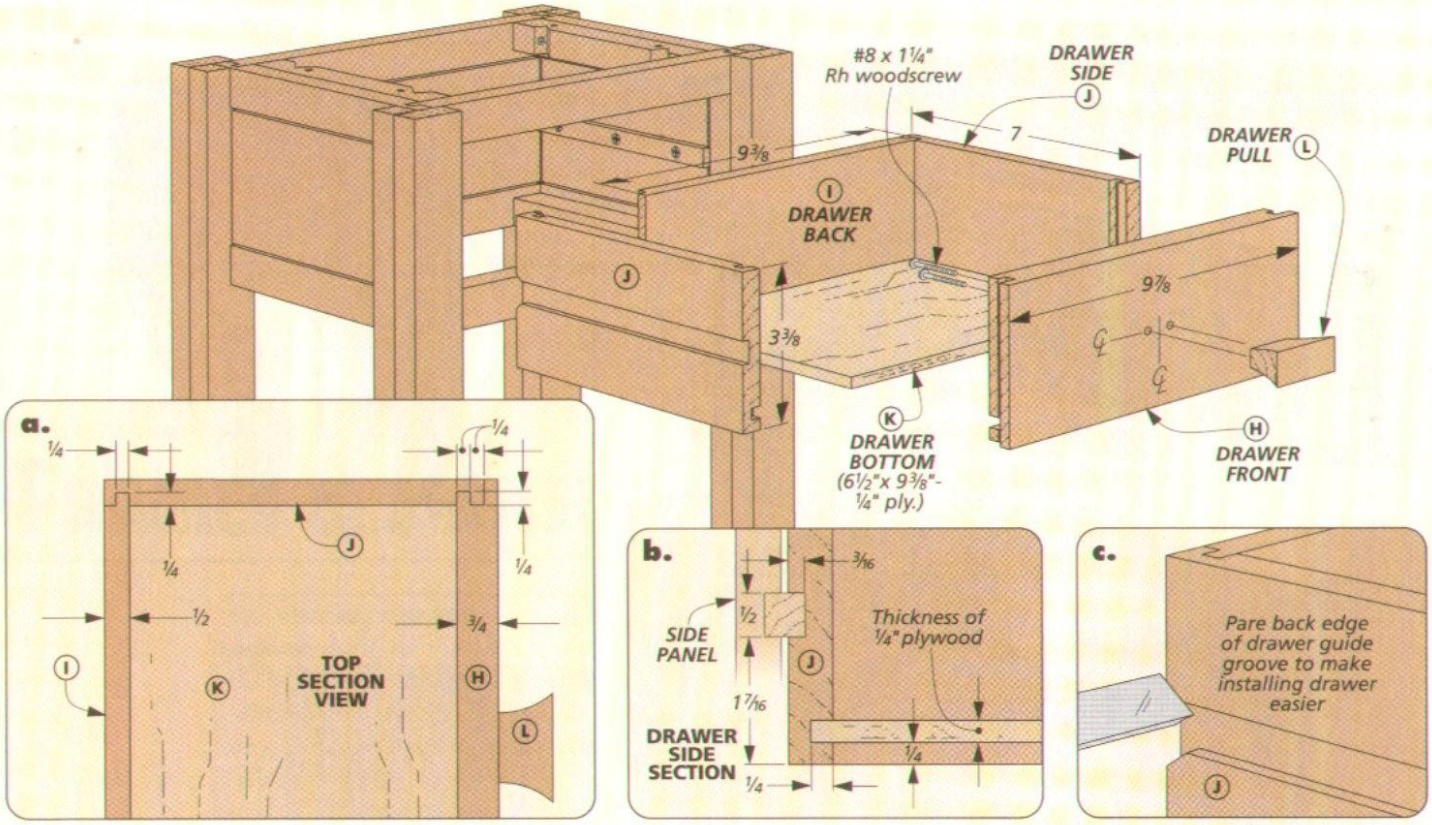

building the DRAWER

With the basic structure of the table complete, you can turn your attention to making the drawer.

The drawing above gives you an idea of just how simple the drawer construction is. To start with, I sized the drawer front to allow for a 1/16" gap all around the front of the drawer. This gap matches the shadow line that you created around the side and back panels.

The sides are joined to the drawer front using a locking rabbet joint. And a tongue and dado joint is used to join the drawer back. All this can be seen clearly in detail 'a.'

Before assembling the drawer, I cut a groove on the outside face of each drawer side for the drawer guides (detail 'b'). I made these grooves just a hair wider than the guides so that the drawer would slide smoothly. Then I cut a groove on the inside face of each drawer piece for a plywood drawer bottom, which is also shown in detail 'b.' Finally, after cutting the drawer bottom to size, the drawer can be glued up.

Once the glue is dry, there are just a couple of details to take care of to complete the drawer. First, I chiseled a "bird's mouth" at the back end of the grooves to help make the drawer easier to install (detail 'c'). And then I made a drawer pull and added a drawer stop to the table, as shown in the Shop Tip box below.

Shop Tip: Drawer Pull and Turn button for Drawer Stop

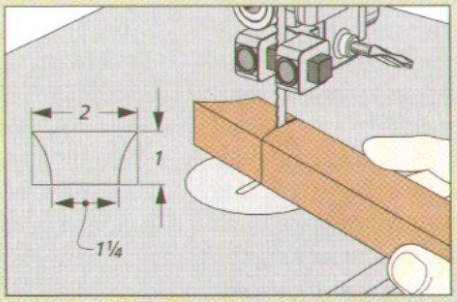

Making the Pull. *Starting with an extra-long blank, cut the curved sides for the drawer pull (see profile drawing above) on a band saw.*

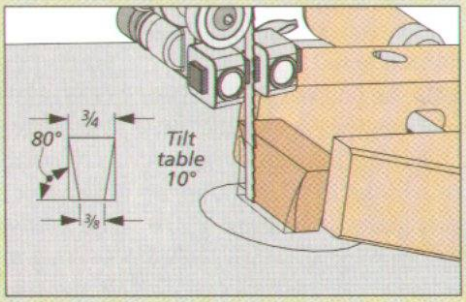

Finishing It Up. *Next, taper the pull at a 10° angle along the top and bottom, using a handscrew to safely hold the workpiece. Attach the pull to the drawer after finishing.*

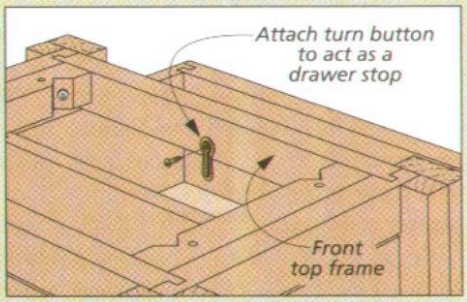

Drawer Stop. *Installing a turn button on the inside of the top frame keeps the drawer from pulling out, but still allows you to remove it with just a twist.*

adding the TOP AND SHELF

At this point, the table is just about done. All that's left is to add a top and a shelf. I started with the top.

The top is really nothing more than a glued-up panel with a cove routed all around the lower edge. But because this is the part of the table that you will see the most, you'll want to spend some time matching the grain and color of the boards you use to glue up the panel. Once the panel is cut to size, you can rout the 1/2" cove along the bottom edge (detail 'a') and then screw the top in place.

The shelf is also cut from a glued-up blank. But it gets notched to fit around the legs, as you can see in detail 'c.' I cut the notches to leave a 1/16" gap around the legs to match the shadow lines around the panels of the drawer assembly. Then to finish it off, I routed a small chamfer along the top and bottom edges of the shelf. After checking the fit of the shelf, I screwed it down like I did the top.

With the table complete, you'll probably be tempted to step back and admire your work. But before you can really do this, you need to take the whole table apart so you can ebonize the legs and frames (and the drawer pull). For more on the ebonizing process, take a look at the box below.

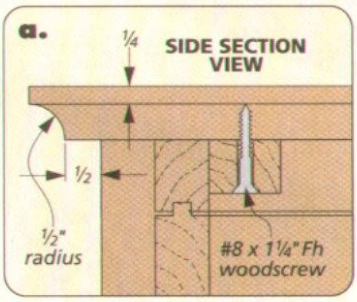

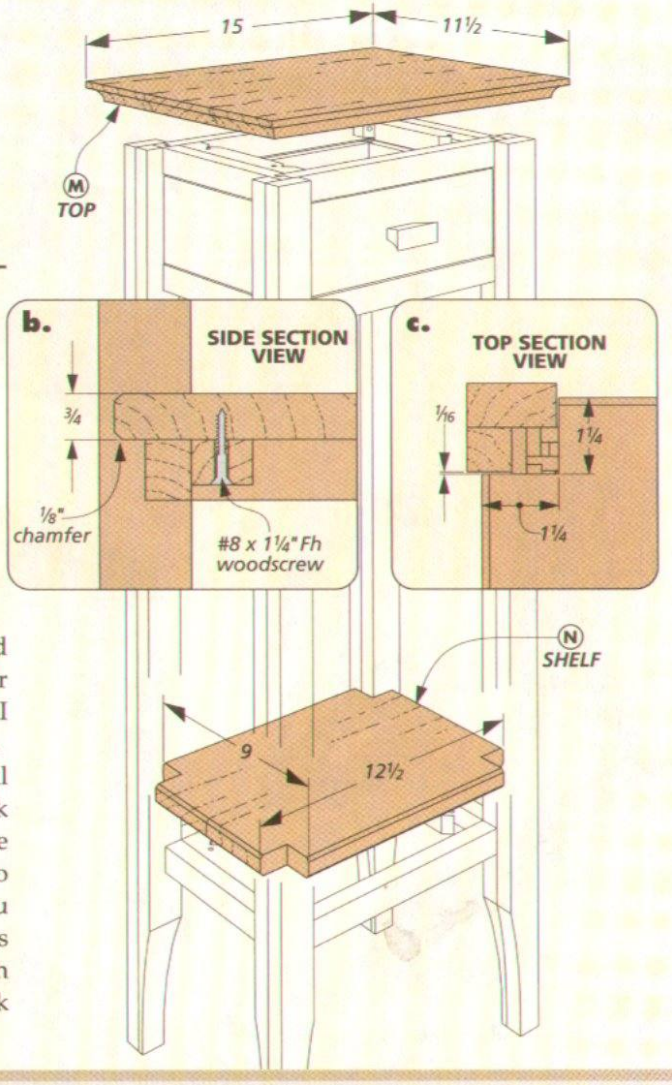

in the finishing room

You might be surprised to learn that the "stain" I used to ebonize the legs and frames of the table actually came from an office supply store. It's nothing more than India ink. It's inexpensive, waterproof, and dyes the wood jet black.

India ink will raise the grain of the wood, so I dampened the wood with water beforehand and then sanded down the grain before applying the ink. Because the ink dries pretty fast, apply it on a small section at a time (see photos below). Use a brush to spread the ink out, working it thoroughly into the pores of the wood.

Once the ink is dry, you can protect the stain by wiping on a couple coats of an oil-based finish.

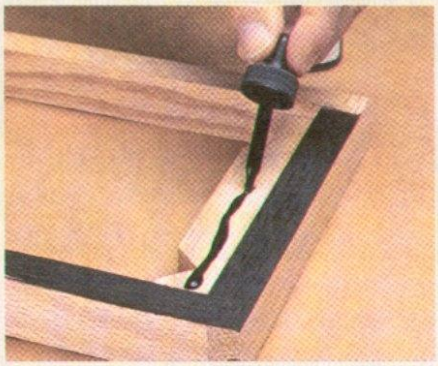

▲ The black India ink dries quickly, so the first step is to apply the ink onto a small section at a time.

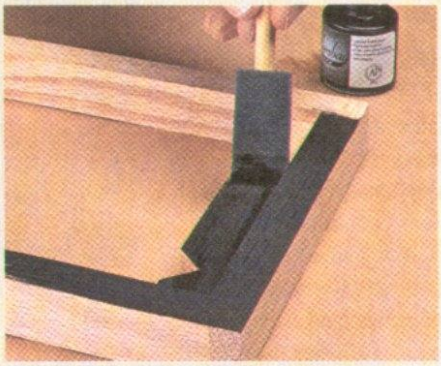

▲ Then use a disposable foam brush to spread the ink and work it into the pores of the wood.

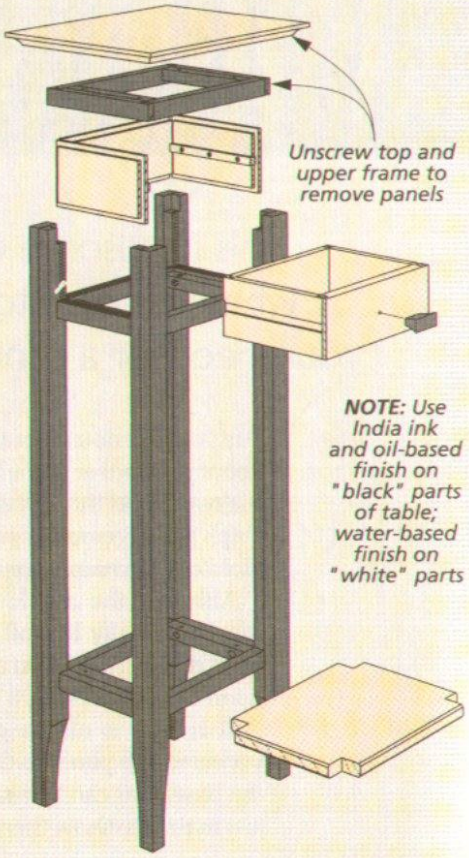

Poker Chip Case

This handsome case is the real deal when it comes to storing everything you'll need for a winning night of poker.

Are you as serious about your woodworking as you are about your poker game? Well, here's a way to combine the two. Build this stylish case for storing all the poker chips and accessories you'll need for your own Texas Hold'em tournament or a classic game of five-card stud.

Although the case looks like a chest with drawers, the top actually lifts off to reveal a pair of removable trays (inset photo). You can customize the trays to hold up to 500 poker chips, a deck of cards, and accessories.

This case is also a great skill builder. From the veneered top panel to the precisely mitered frames in the base, you can fine-tune your woodworking skills just in time to show them off right before the big game.

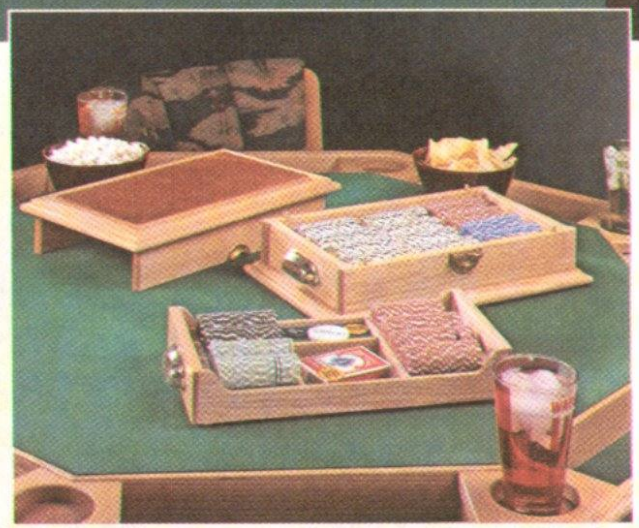

▲ Lift off the top of the poker chip case and you'll find a pair of removable trays "nested" inside. One tray holds a selection of poker chips and the other keeps a deck of cards, accessories, and a few more chips close at hand.

CONSTRUCTION DETAILS

OVERALL DIMENSIONS: 16¼"W x 10"D x 6⁹⁄₃₂"H

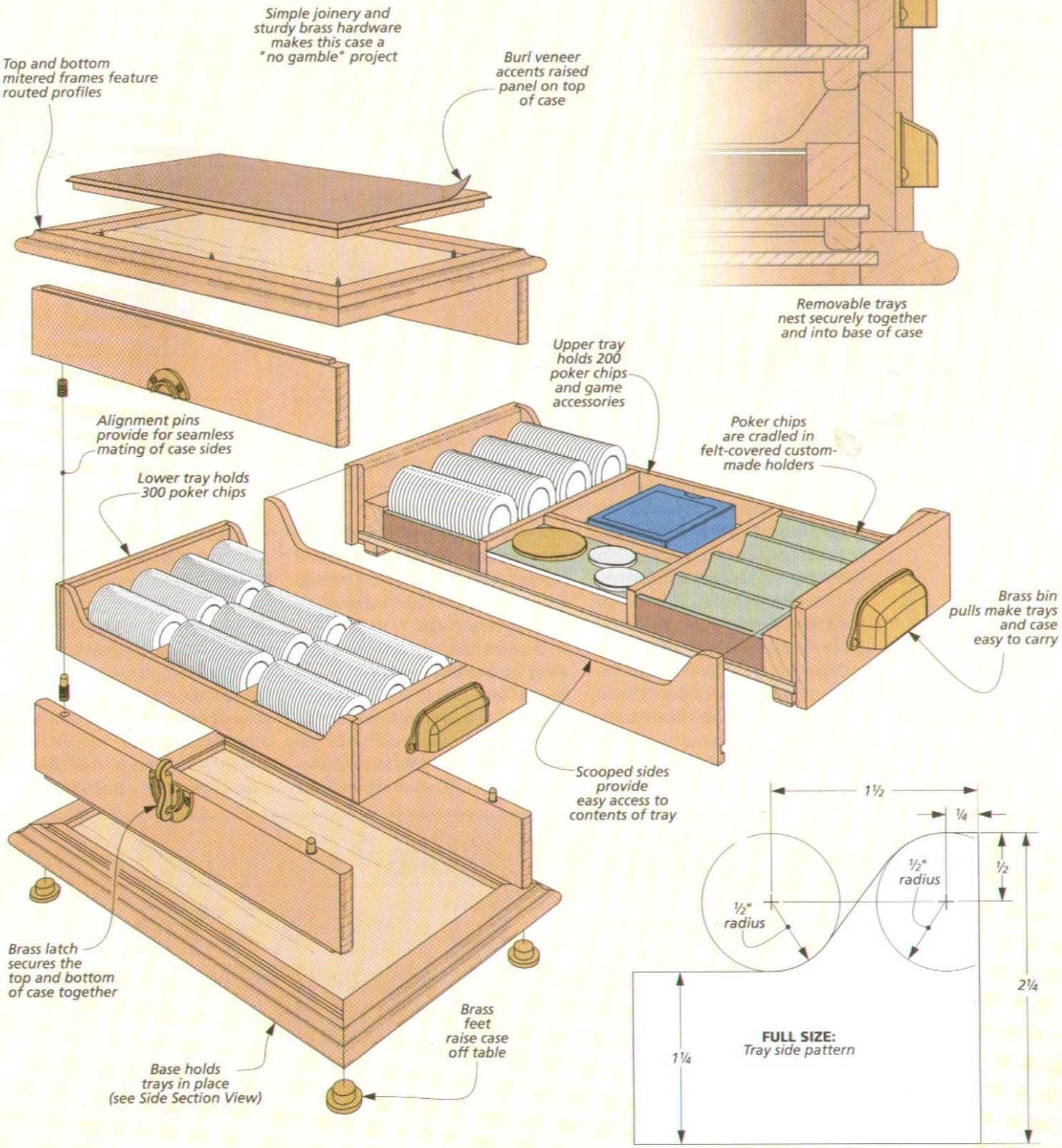

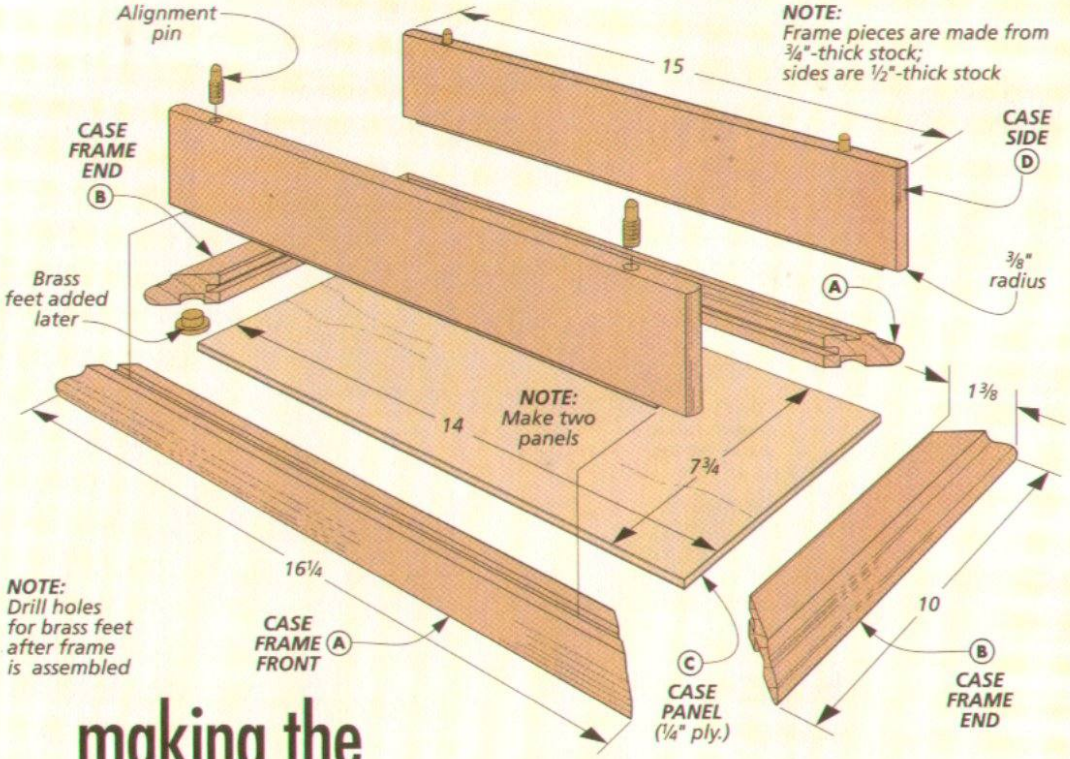

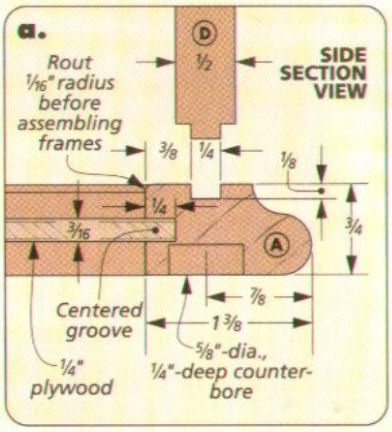

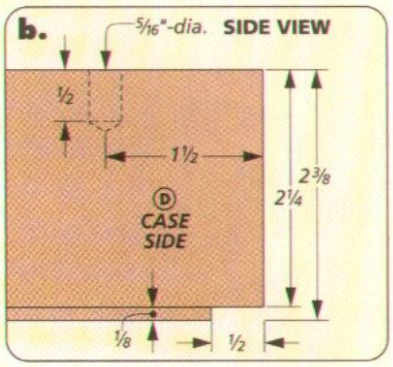

making the OUTER CASE

This poker chip case is really nothing more than an open-ended box with a pair of trays nestled inside to hold chips and accessories. The main challenge here is building the top and bottom of the case so the sides fit perfectly flush when they're together.

To accomplish this, I did a couple things. First, I worked on similar parts together. For example, the profiled edges on the top and bottom frames are on different faces, but the frames are still identical. So you can make the parts for them at the same time. And second, when it came time to shape the sides and then add them to the base, I pinned the sides together and worked with them as single assemblies.

START WITH THE FRAMES. For now, let's get started with the mitered case frames. Each one is just a hardwood frame wrapped around a plywood panel (drawing above and opposite page).

The first thing to do is cut a centered groove in the frame stock to match the thickness of the plywood panel. With that complete, you can miter the frame parts to final length and cut the panel to size. Before you glue the frame around the panel, there's one more thing to do. And that's to cut a groove in the front and back frame pieces to accept a tongue you'll cut later on the sides of the case, as in detail 'a.'

ROUTING THE PROFILES. Once you have the frames glued up, you can rout the profiles shown in the How-To box on the opposite page. Just be sure to rout the profiles on the correct faces to turn one frame into a top and the other frame a bottom. While I was at it, I drilled a set of counterbores in the bottom frame to accept the brass feet that are added later, as in detail 'a' above.

Shop Tip: Drilling Alignment Pin Holes

A pair of two-piece alignment pins in each side keep everything flush when the case is closed.

The key to keeping the sides of the poker chip box perfectly aligned is accurately locating the holes for the alignment pins (photo at left). To do this, I set up a pair of stops on my fence using the procedure shown in Shop Notebook on page 30. Then I made sure to drill the holes with the outside of each side facing the same way, as shown at right.

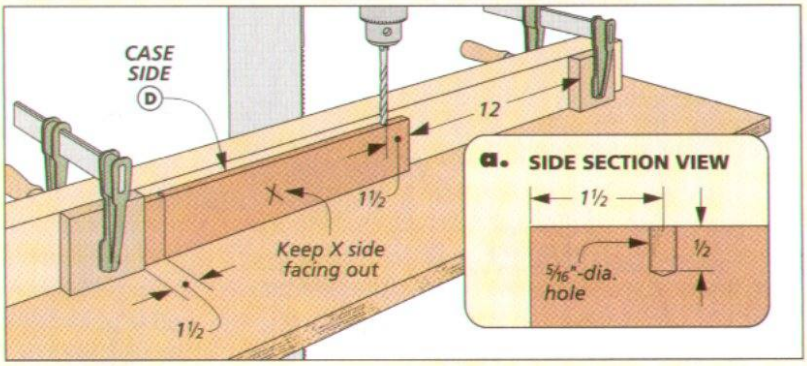

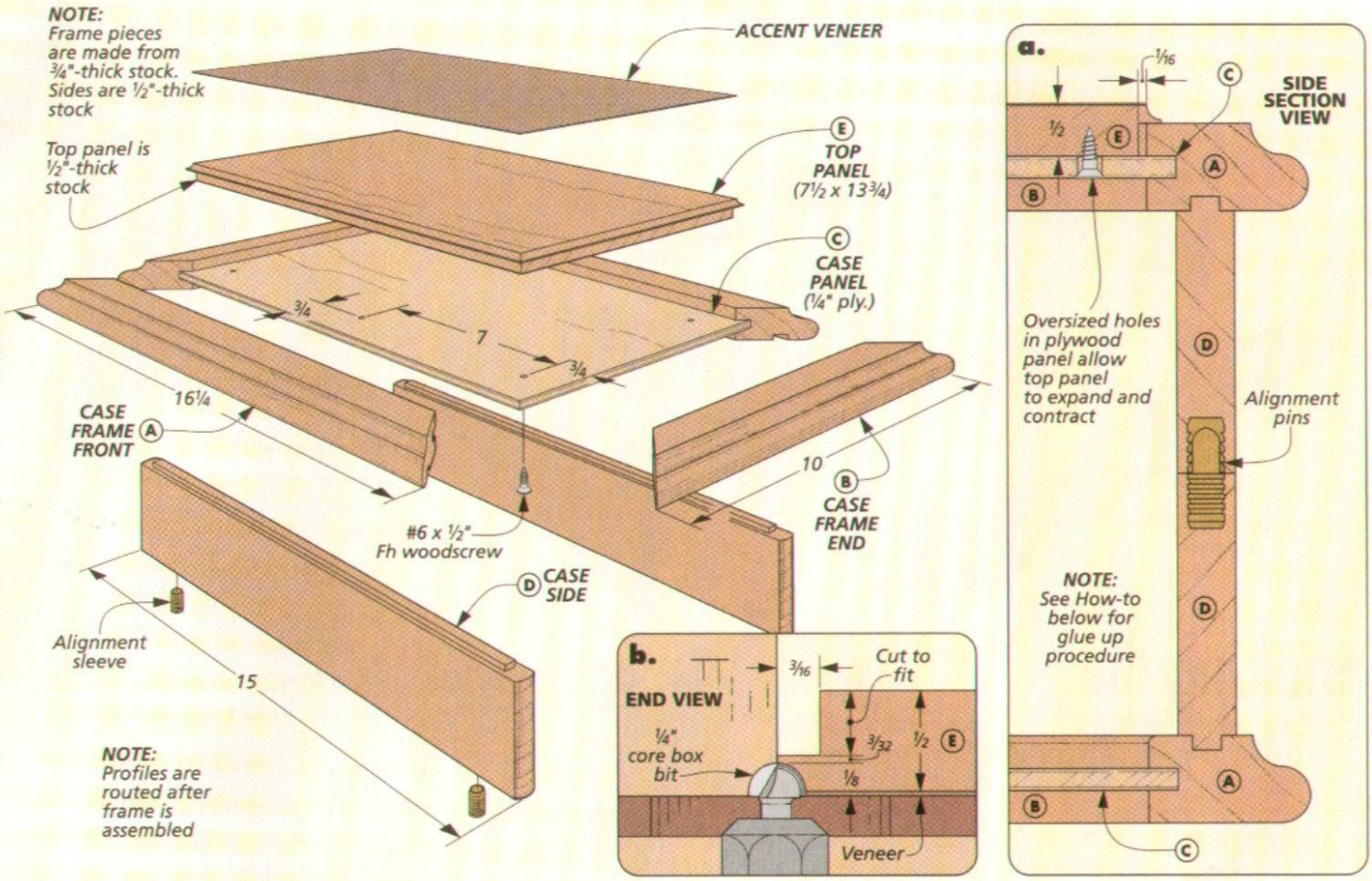

MAKING THE SIDES. The next step is to add the sides. To ensure a seamless fit when the top and bottom of the case come together, I did two things. First, I cut each mating pair of sides from a single length of stock. Then, I used the procedure shown at the bottom of the opposite page to locate the mating pins.

Now you're ready to form a tongue along the edge of each side piece that mates with the grooves cut earlier in the top and bottom frames. Detail 'b' on the opposite page shows you how far to trim back the tongue so each side fits the groove perfectly.

With the tongues complete, you can tap the pins in place and mate each set of side assemblies. This makes it easy to form a smooth, flush bullnose at each end.

The case is ready to be assembled at this point. Here again, to keep everything perfectly aligned, I glued the sides, top, and bottom together as a single assembly (see the How-To below).

ADDING THE TOP PANEL. All that's left to complete the main case is to add the veneered top panel you see in the drawing above.

After gluing the veneer in place, you'll need to cut a rabbet on the edges of the panel. The rabbet is sized to allow the panel to expand and contract. And the top panel just rests on the surface of the plywood panel in the top frame (detail 'a').

In detail 'b,' you can see how I eased the edges of the top panel with a core box bit. Then, to allow the panel to expand and contract, I drilled a set of oversized holes and screwed the top panel in place.

How-To: Rout Frame Profiles & Assembly Of Case

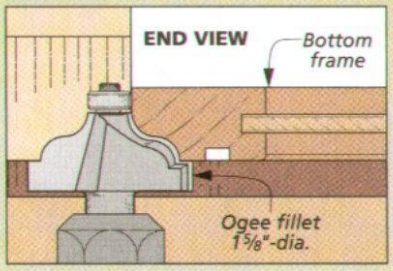

Rout the Profile. *For the bottom of the case, rout the ogee profile on the face with the grooves for the sides.*

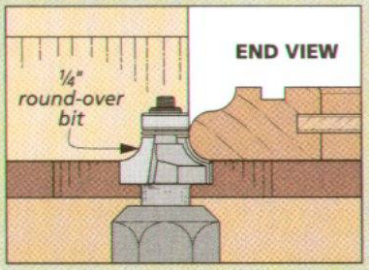

Ease the Edge. *Finally, install a round-over bit in your router and easy the opposite edge of the frame.*

Assembly. *To ensure proper alignment of the sides to the frames, mark centerlines on the sides, top and bottom. Then verify the ends are even with a square, just like you see in the drawing.*

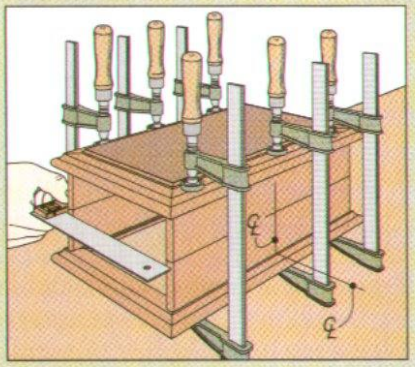

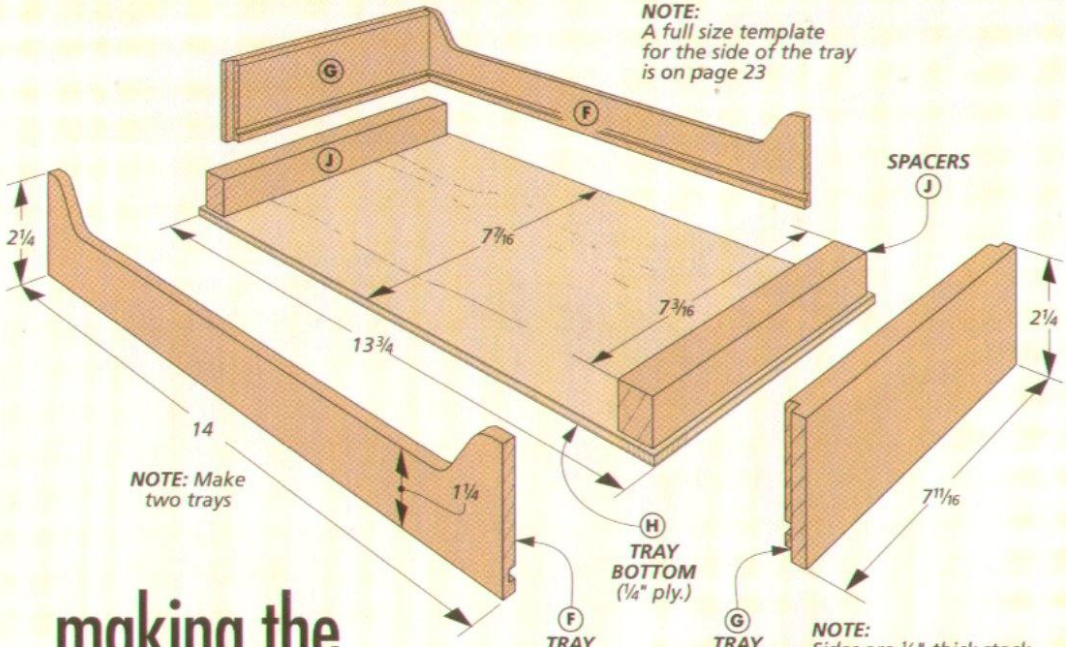

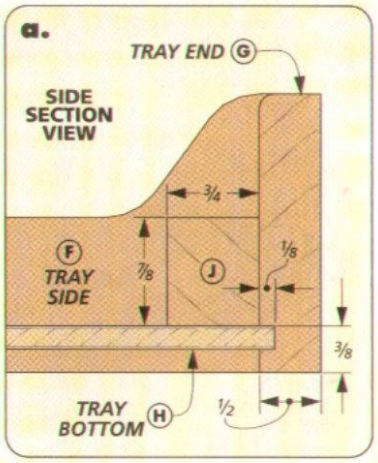

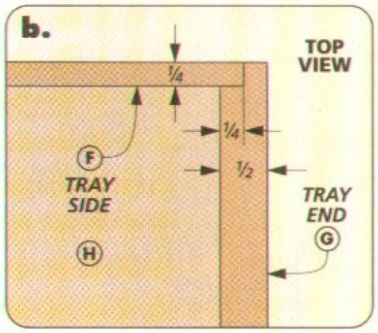

making the TRAYS

With the outside of the case complete, you can turn your attention to making two identical trays that will fit inside the case. Once these are built, you can customize each of the trays to hold the poker chips and accessories you have.

As you can see in the drawing above, the trays aren't all that complicated to build. A pair of shaped sides, two ends, and a bottom make up each tray.

PLANE SOME STOCK TO SIZE. I started on the trays by planing down some stock for the sides and ends of each tray. After trimming these pieces to final size, you can cut a groove near the bottom edge of each piece for the ¼" plywood bottom, as shown in detail 'a.'

The next step is to shape the sides of the tray. You'll find a full-size pattern on page 23 and the How-To box will guide you through the process.

Before assembling the tray, you'll need to cut rabbets on the tray ends to accept the sides (detail 'b'). Once that's done, you can cut the bottoms to size and glue up each tray.

CHIP HOLDERS & SPACERS. The next step is to start outfitting the trays to hold the chips and accessories. To start that process, you'll need to make a set of chip holders, like the ones you see on the opposite page.

To make it easy to remove each stack of chips from the tray, I used spacers at the ends of the tray and between each chip holder. For now, all you need to do is size the spacers at each end and glue them in place, like you see in detail 'a.'

The spacers that fit between the chip holders will be sized later to take up the remaining gaps. You'll find all about this and completing the trays by turning to page 28.

How-To: Creating a Straight, Smooth Profile

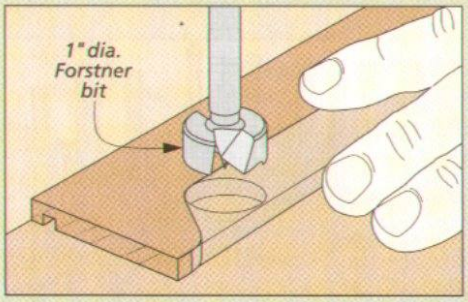

Establish the Curve. *The first step in shaping the sides is to drill out the curved recess at each end with a Forstner bit.*

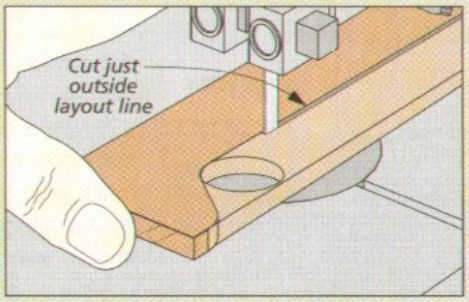

Remove Waste. *Next, remove all the remaining waste with a band saw, making sure to stay just outside the layout line.*

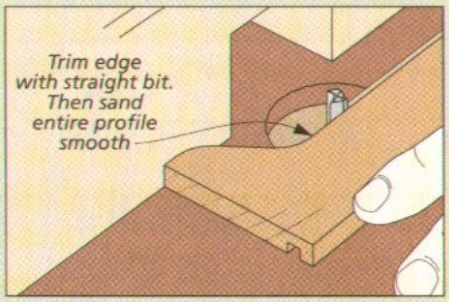

Rout It Straight. *Finally, to clean up the edge with a straight bit, adjust the router table fence to trim right along the layout line.*

How To:

Poker Chip Holders

One of the more challenging aspects to building the poker chip case was making the curved holders that cradle the poker chips inside each tray. Lined with felt, each holder provides the perfect storage spot for a set of 100 poker chips, 25 in each slot.

The step-by-step instructions for making each holder are shown in the drawings at right. You'll find everything you need to know there, so I'll just cover a few specifics to make sure everything is clear.

MAKING THE BLOCKS. Each holder starts out as a block made up of two pieces of MDF and a center section of ½"-thick hardwood. You'll need a total of five blocks, one for each chip holder.

FORMING THE CURVES. After gluing up each blank, you're ready to form the curved part of the holder, as in Step 1. I used a Forstner bit for this and only drilled partially through the blank. Why? When you cut the blank apart to form the two halves of the holder (Step 2), the flat areas along the edges make perfect clamping pads, as illustrated in Step 3.

FINAL SHAPING. Once each holder is glued up, all that's left to complete the final shaping is a couple cuts and a little sanding.

Step 4 shows how I trimmed away the excess material along the edges of each blank (make sure each tray is wide enough for a stack of 25 poker chips). And in Step 5, you can trim the ends of the holder, sneaking up on the final length so the holders just fit between the sides of the tray.

SAND IT SMOOTH. Finally, to make sure the felt that's added later goes on nice and smooth, take a little time to sand the top edge and the curved areas of each holder to remove any ridges at the joint line.

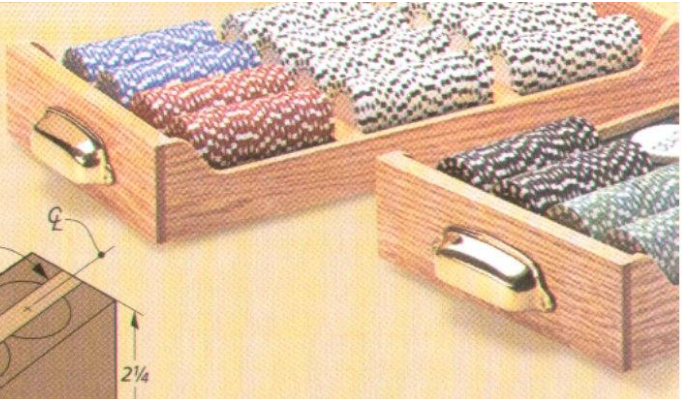

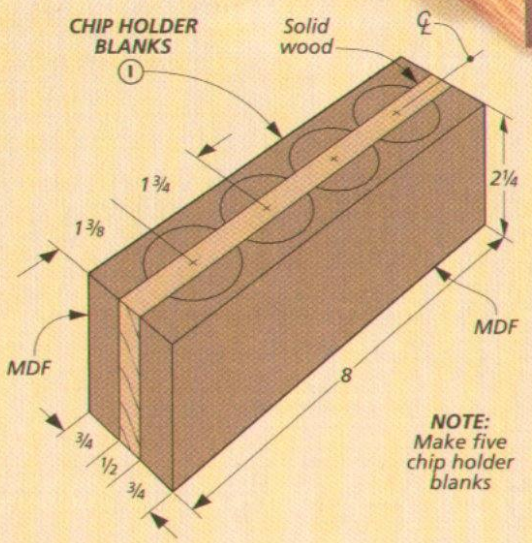

▲ Each chip holder starts out as a solid block formed by gluing up a thin strip of hardwood between a pair of MDF blanks.

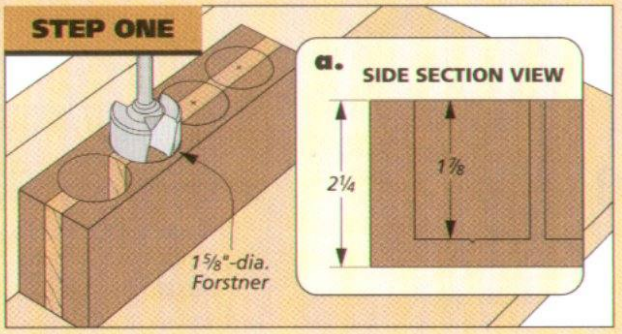

To form the cutouts for the poker chips, drill a series of centered holes along the blank. To provide a clamping area for assembly later, don't drill all the way through the blank.

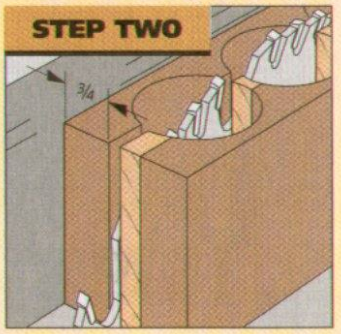

Rip the blank apart along the joint line to create the two halves of the holder.

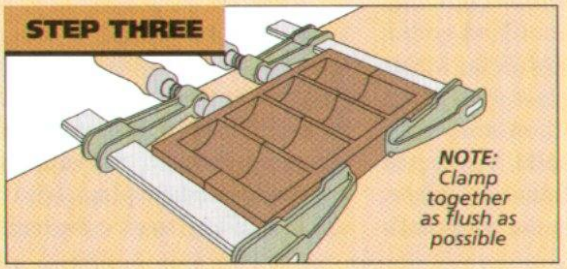

Glue the two mating pieces together to form a single tray. Aligning the curve parts of the tray as flush as possible now will save clean-up work later.

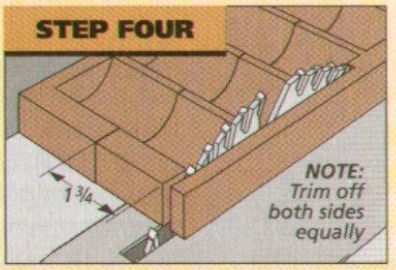

Next, trim both edges of the holder equally to fit a stack of poker chips. (I sized mine to hold 25 poker chips.)

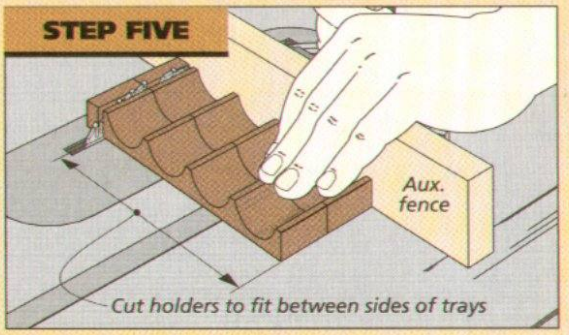

Now, attach an auxiliary fence to your miter gauge and trim each holder to final length. You want each holder to fit snugly between the sides of the tray.

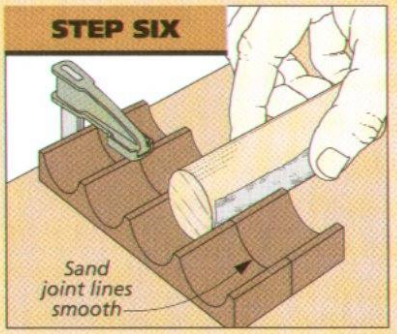

Finally, a dowel wrapped with sandpaper makes it easy to smooth the joint lines in the chip recesses.

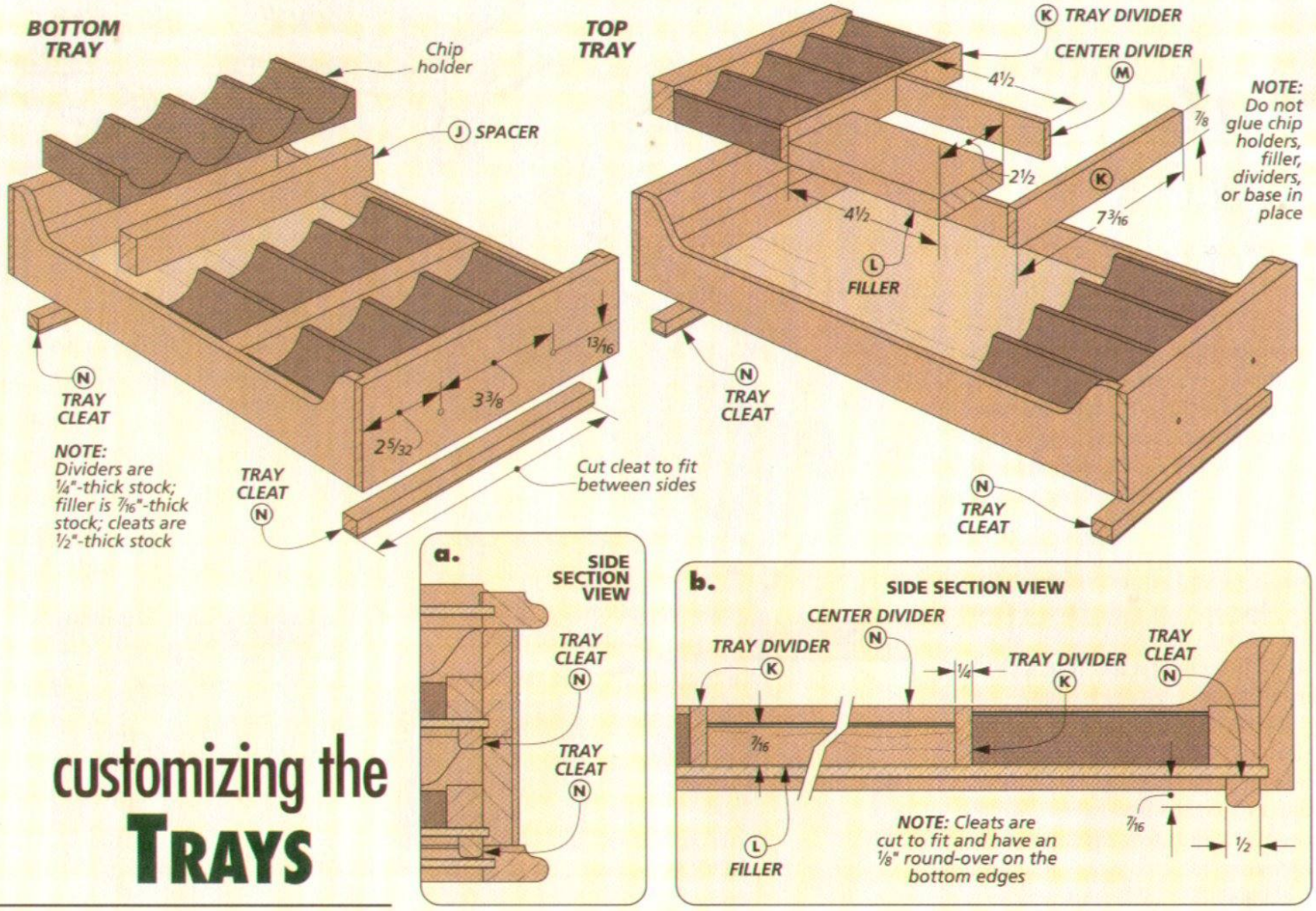

customizing the TRAYS

There's not much left to do to complete the poker chip case at this point. As you can see in the drawing above, the bottom tray is outfitted with a set of three holders while the upper tray gets two holders and a divided center section for accessories.

COMPLETING THE HOLDERS. Before you slip the chip holders in place, there's one thing to do. And that's add some felt to cushion the chips. You can read more about how to do this in the box below.

OUTFIT THE BOTTOM TRAY. Once the felt is glued down, you can slip the holders into the tray. Then it's just a matter of making two more spacers, sizing them so everything just "presses" snugly in place. I did this so I didn't have to glue the holders to the tray. This way, it's easy to remove the center spacers and chip holders to brush the felt clean. (Or replace the holders if they get stained or damaged.)

THE TOP TRAY IS NEXT. At this point, you can turn your attention to the top tray which is configured a little differently. After slipping a chip holder in place at each end of the tray, I cut a pair of ¼"-thick tray dividers to create a center compartment, like you see in the drawing above. Here again, the dividers are sized in length to fit snug between the sides of the tray.

To divide the center space, I first cut a filler to provide a raised area. (I use it for the dealer and betting markers.) A center divider glued to just the filler separates this area from the card compartment. Like the chip holders, I added some felt (see How-To at left).

ADD THE TRAY CLEATS. Finally, to keep the trays aligned in the case, I added a pair of cleats to the bottom of each tray (drawings above).

How-To: Custom Fit Felt

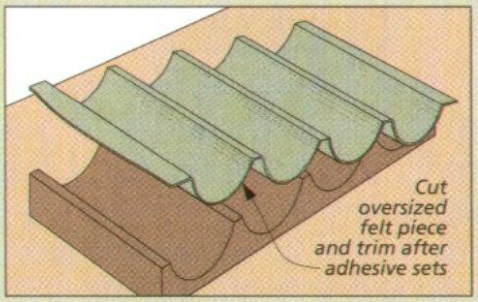

Lay the Felt. *To complete the poker chip holders, apply spray adhesive and then press a piece of oversized felt in place. Trim the excess flush with the edges using a razor blade.*

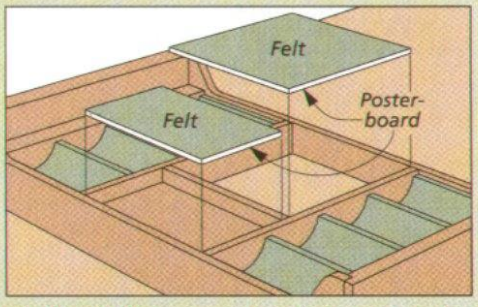

Final Details. *To complete the center section of the top tray, cut a piece of posterboard to fit each compartment. Then attach pieces of felt and trim them flush with the edges.*

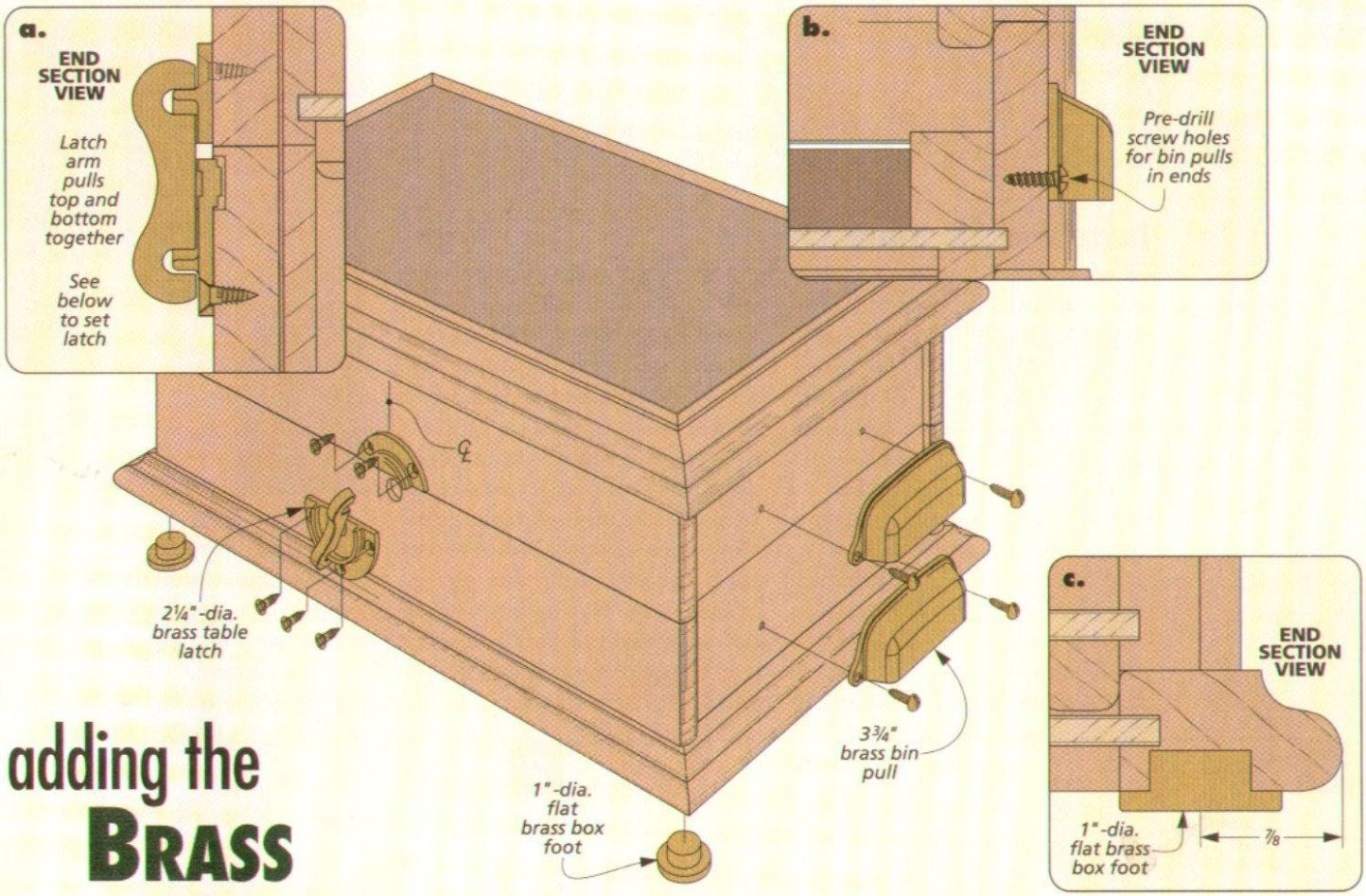

adding the BRASS

You can rest easy now, all the hard work is done. After applying a finish to the case and trays, you're ready to install the brass hardware that really sets off this project.

Installing most of the hardware is fairly simple. The brass feet that fit into the counterbores in the bottom of the case are simply glued in place with some epoxy. And the bin pulls at each end of the tray are screwed in place so they're centered on the ends of the trays.

ADDING THE LATCHES. The trickiest part of the hardware installation is installing the latches on each side of the case. These keep the case closed when you pick it up by the pulls.

The instructions in the How-To box below will guide you through the installation. And you'll find a handy tip for installing the top part of the latch so it's nice and snug in the closed position.

All that's left at this point is to gather up your poker chips, markers, and cards and place them in their new home. Then it's time to call a few friends over to show-off your woodworking skills — the case will distract them enough to win a few hands of poker before they know what hit 'em.

How-To: Setting the Latch Position

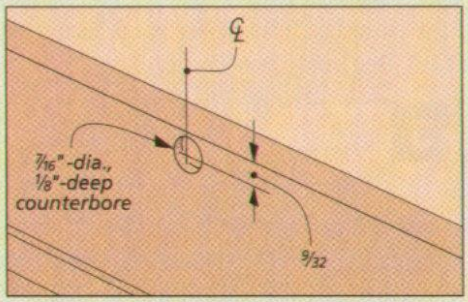

Provide Some Clearance. *The latch I used had a little "nub" on the back. To provide clearance, you'll need to drill a shallow counterbore in the lower case side.*

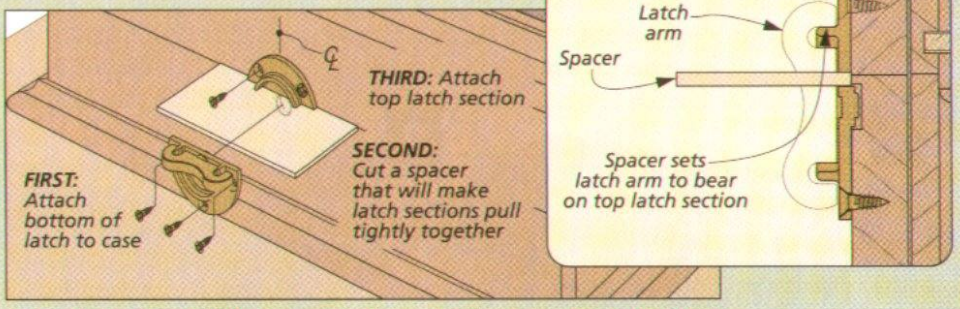

Ensuring a Snug Fit. *Once you have the lower part of the latch screwed in place, it's important to locate the upper part so the latch pulls the top and bottom together. I used a thin spacer to raise the upper part of the latch slightly, ensuring a tight fit with the latch arm.*

SHOP NOTEBOOK

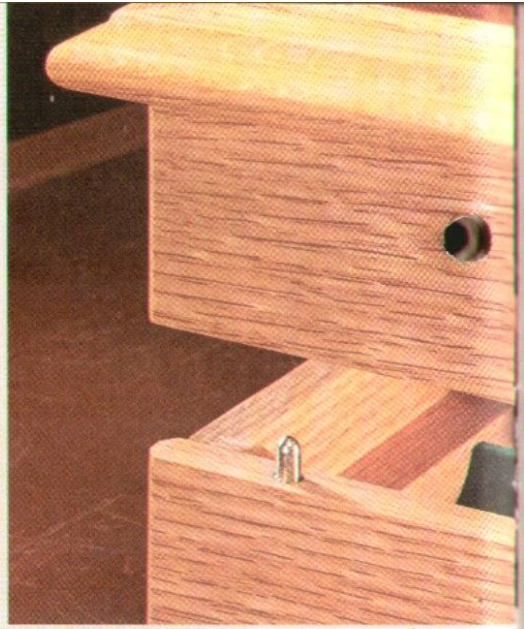

Installing Alignment Pins

When it comes to installing the alignment pins in the sides of the poker chip case on page 22, the key is to make sure the pins match up perfectly with the sleeves. In order to do this, I set up a stop block at each end of an auxiliary fence on my drill press. But the trick is to make sure that both blocks are exactly the same distance away from the drill bit.

To position the blocks, I made a simple set-up gauge. The gauge is nothing more than a narrow (1"-wide) strip of wood with a hole drilled near one end, as shown in Figs. 1 and 1a. The strip of wood used for the gauge should be the same length and thickness as the sides of the poker chip case. And the hole should be centered on the thickness of the piece.

To use the gauge, mark an "X" on the outer face. Then lower the drill bit down into the hole. Now butt a stop block against the far end of the gauge and clamp it in place.

To position the stop block on the opposite end of the fence, raise the drill bit out of the hole and flip the gauge around end for end, making sure to keep the "X" facing out (see Fig. 2). Then lower the bit down into the hole again and clamp the second stop block in place. Now you can remove the gauge and drill the holes in your workpieces.

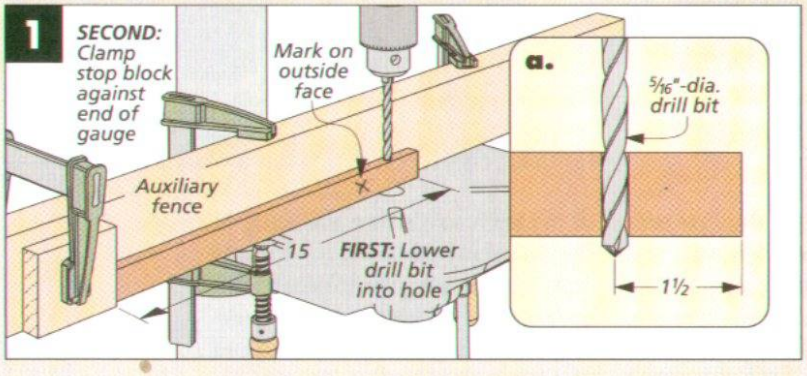

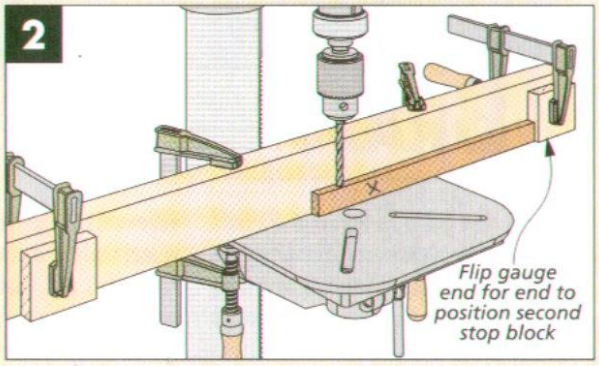

Laying out an Octagon

You might think that laying out the octagon for the poker table on page 32 requires an advanced degree in geometry. But the truth is, you can do the whole thing with nothing more than a straightedge, a pencil, and a layout gauge made from a scrap of wood.

To lay out the octagon, start with a square blank for your top. Draw diagonal lines across the corners to determine the center of the blank. Now make the layout gauge by cutting a scrap of wood to length to match the distance from one corner of the blank to the center, just as you see in Fig. 1 below.

To mark out the first point of the octagon, place the gauge along the edge of the blank, flush with a corner, as shown in Fig. 2. Mark the edge of the tabletop blank at the end of the gauge. Then swing the gauge over to the adjacent edge of the blank and mark the second point of the octagon. Now just repeat this process at the other three corners of the blank.

Finally, to complete the octagon, simply use a pencil and a straightedge to connect the layout marks on the edges of the blank, like you see being done in Fig. 3.

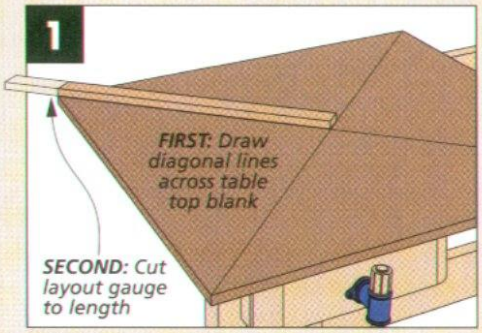

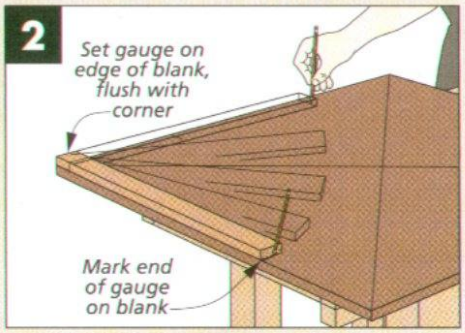

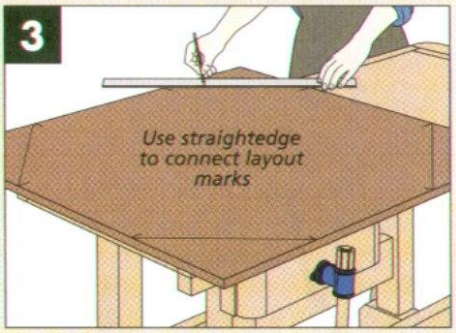

Applying the Felt

There's really nothing difficult about applying the felt to the top of the poker table on page 32. But working with felt is a little bit different than working with wood.

PREPARATION. Before you can glue the felt down, you need to get it ready. Start by laying it out face down on a large, flat surface. (I used a 4' x 8' sheet of ¾" MDF as a worksurface.) Then cut a 48"-square piece out of the roll.

To get rid of the creases in the felt, I used a clothes iron. But you have to be careful — it's easy to "melt" the fabric if your iron is too hot. So make sure to use a low heat setting for synthetic fabrics.

ADHESIVE. Once the felt is ironed smooth, you're ready to attach it to the poker table top. The felt is glued down using a spray adhesive. (I used *3M's Super 77*.) I applied a light coat of adhesive to both the tabletop and the felt.

When the adhesive is dry, you can carefully set the table top down on the felt. This is really a two-person job. But to make things a little easier, I installed a couple of bolts into the threaded inserts in the top to serve as handles (see Fig. 1).

TRIMMING THE FELT. Once the top is laid down, you can trim off the excess felt using a straightedge and a utility knife. You'll want to leave a border of felt about three inches wide around all the edges of the top. This allows you to wrap the felt over the edges (Fig. 2).

Before you can do this, however, you'll need to cut a V-notch in the felt at each corner of the table. This prevents the felt from bunching up when it gets folded over. The trick here is to stop cutting just a hair before you reach the table top, as you see in Fig. 2a.

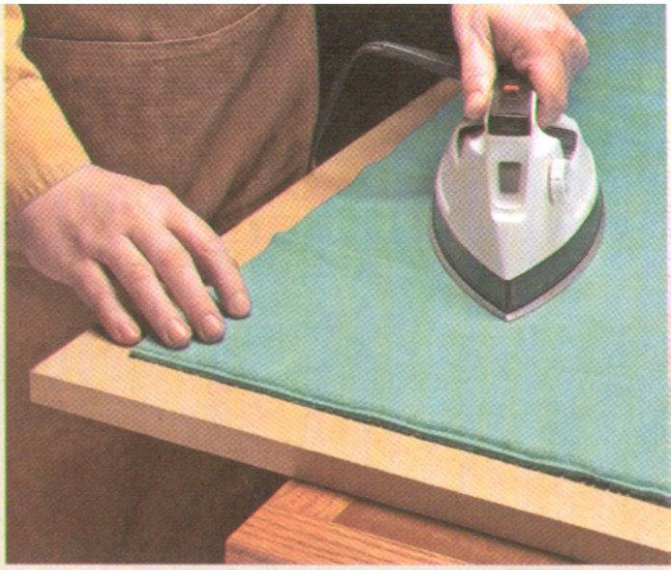

▲ To remove the creases and folds from the felt, gently iron it (using low heat) before gluing it down to the top of the poker table.

Then spray adhesive all around the perimeter of the top before folding the felt over the edges.

Once you've finished applying the felt to the top of the table, you can start covering the tray liners, see box below.

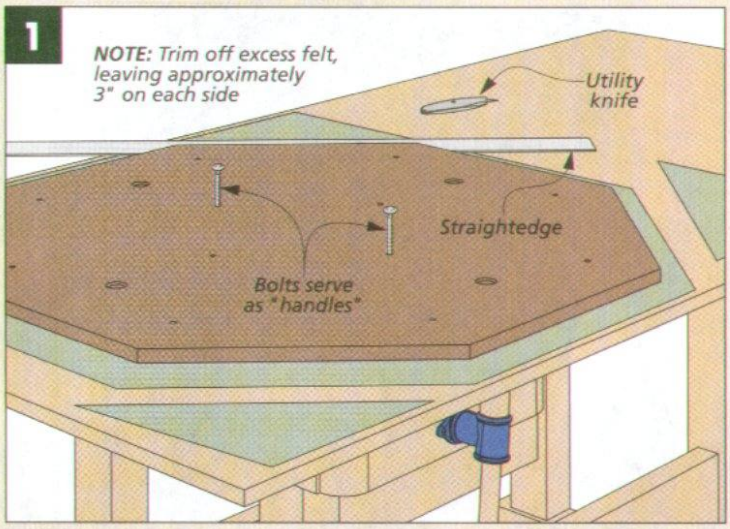

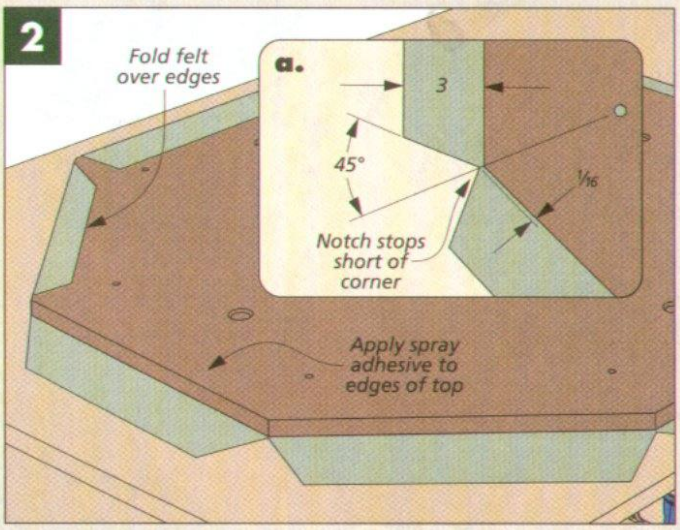

How-To: Add Felt to Tray Liners

Like the top of the poker table, the chip trays are also lined with felt. But instead of gluing the felt down directly to the bottom of the compartments, I made some hardboard tray liners. The liners are covered with felt and then dropped down into place in the compartments (see drawing at right). This way, you can quickly pop them out for cleaning or replacement.

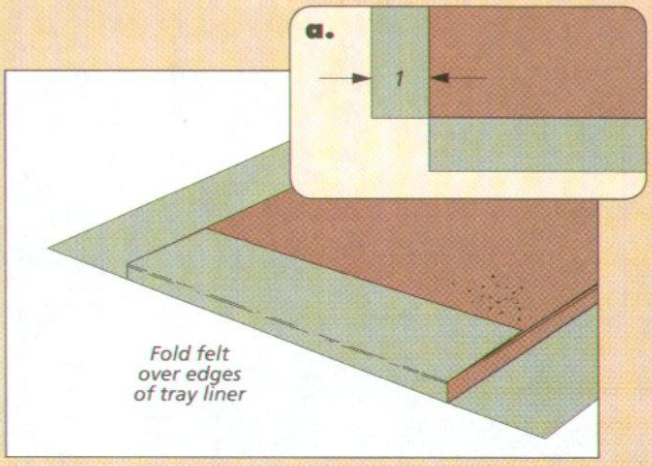

classic oak Poker Table

What could be more enjoyable than pulling a chair up to this classic poker table for a game of cards with a few friends? But that will come later. First, you'll get to take on the challenge of building the table.

With all the features you see above — felt playing surface, built-in coasters, veneered trim, and the great-looking pedestal base, you might think this project would be pretty difficult to build. And I'll admit, there are a few things here that will expand your skills. But even with all the extras, it goes together surprisingly easy.

To streamline the job, I used pre-made parts to build the base. This allows you to focus your efforts on the all-important top. You'll find the key here is simply taking on the job in small steps.

And the table doesn't need to be limited to poker games. Add the optional wood cover on page 41 and it's a great table for any use.

NOTE: Poker table felt provides non-skid playing surface

NOTE: Octagonal table will seat up to eight players

Felt-covered center panel

Cork-lined coaster provides convenient place to set beverage

MDF subtop

Classic ogee profile on table edge

Mounting plate bolted to pedestal

Hardwood inner liner

MDF tray ring

Shallow, felt-lined trays hold poker chips

NOTE: See page 41 for optional wood cover

Raised field of burl veneer

NOTE: Pedestal legs are bolted to column

Pedestal leg

Pedestal column

NOTE: Coasters are assembled separately and then added to top

Cork coaster liner

NOTE: Pedestal base built with pre-made parts. See page 49 for sources of hardwood pedestal supplies

Pedestal base gives the table solid footing with plenty of legroom

Hardboard coaster bottom

CONSTRUCTION DETAILS

OVERALL DIMENSIONS: 53⅛"W x 53⅛"D x 29"H

EXPLODED VIEW COASTER ASSEMBLY

Poker table felt is glued to MDF panel

T-nut installed in subtop

Threaded insert installed in felt top panel

Hardwood inner liner

MDF subtop

Finger hole for removal of felt top

Felt-covered hardboard tray liners

Finger hole for removal of tray liners

Two-piece mounting plate provides rock-solid connection between base and top

TABLE TOP SECTION VIEW

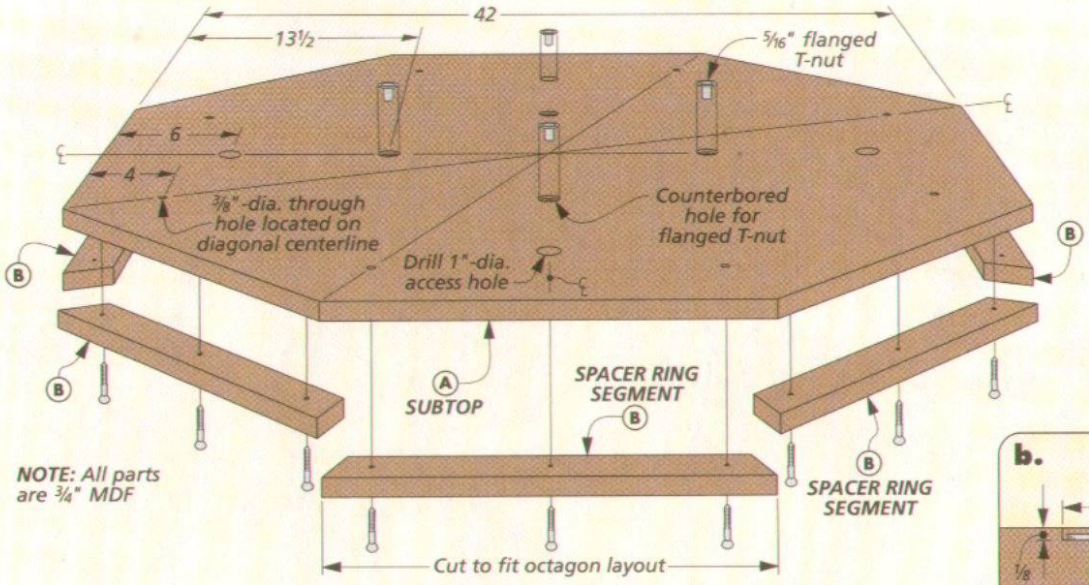

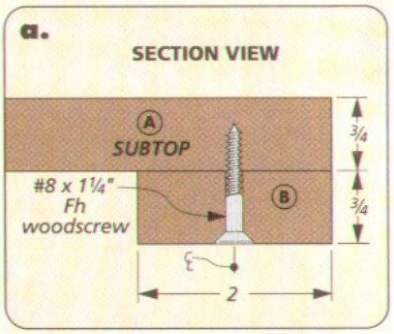

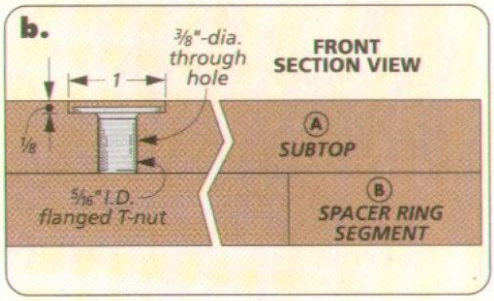

starting the TABLETOP

After looking over the construction details drawing on page 33, you might be asking — "Okay, now where do I start?" Although this poker table is a bit different from other table projects, it breaks down about the same. You'll need to build a base and you'll need to make a top. Normally, the base would come first. But since the top involves most of the work, that's where I started.

SUBTOP AND SPACER RING. Building the multi-layered top begins by making the octagonal subtop and spacer ring shown above. These are the two middle layers of the "sandwich" that the rest of the top will be built around. So the important thing is that this assembly is dimensioned accurately.

To do this, I used each part to help make the other. In a nutshell, you're going to lay out the octagonal subtop and then use it to accurately size and assemble the spacer ring. Then the spacer ring can be used to flush-trim the subtop to finished size. This "back and forth" method worked really well to give me an accurate assembly.

I started by cutting a 42"-square piece of ¾" MDF needed for the subtop. Next, you'll need to lay out an accurate octagon on the subtop blank using the method shown on page 30. But you don't want to cut the blank to shape just yet.

The box below shows how to proceed from here. The octagon you laid out on the subtop is used to size the pieces of the spacer ring. In order to get a perfectly shaped

How-To: Cut the Subtop and Spacer Ring

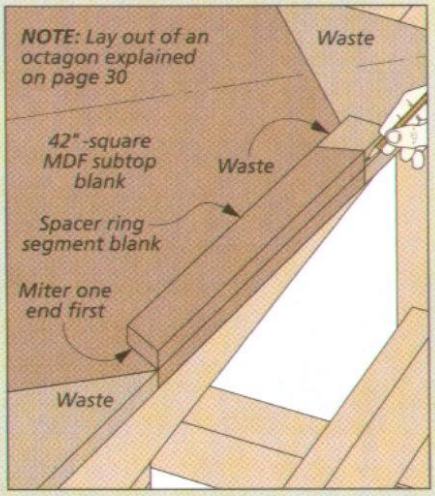

Find the Length. *You can use one edge of the subtop layout to find the length of the spacer ring sections.*

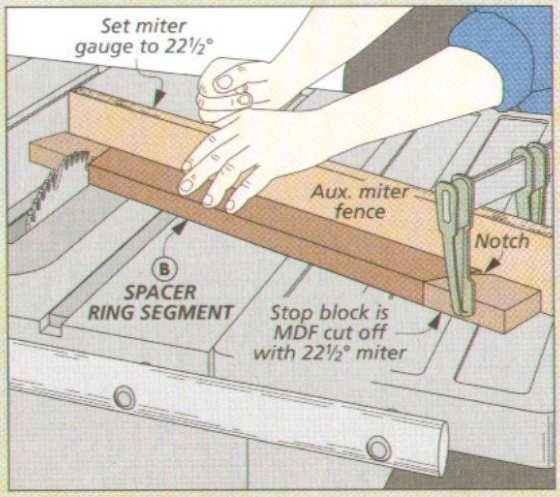

Spacer Ring Segments. *Identical spacer ring segments are cut by using an angled stop block clamped to an auxiliary miter gauge fence.*

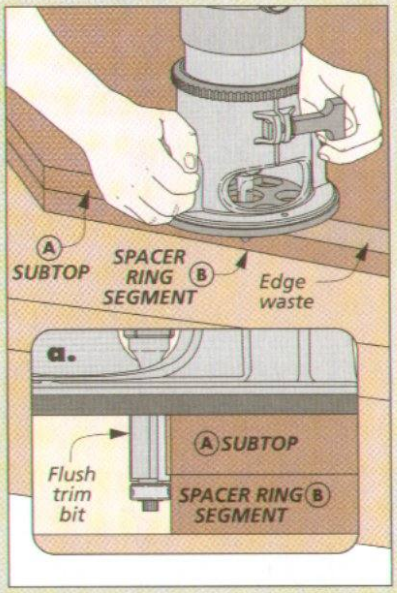

Trim the Subtop. *The perfectly sized spacer ring acts as a template to flush trim the rough-cut subtop.*

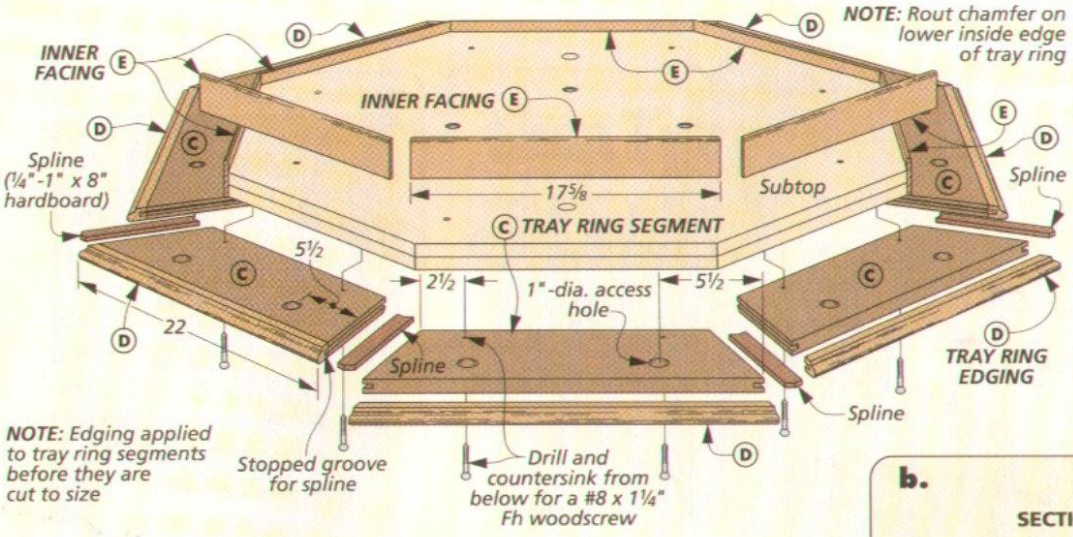

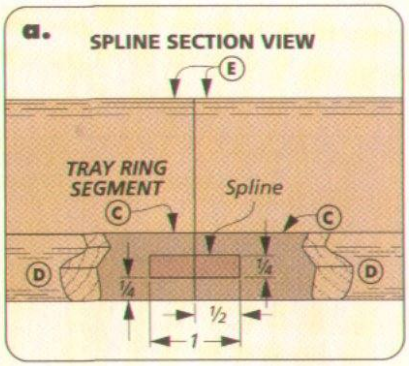

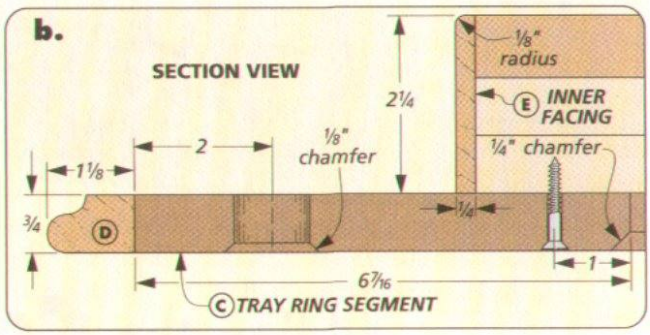

ring, you'll need to miter all of the pieces to exactly the same length. But this isn't difficult, and the article on page 12 will show you how to get great results.

Once the pieces of the spacer ring were accurately mitered to length, I used a web clamp to glue the pieces into a ring. If you do this with the ring resting on the subtop layout, you can easily make sure the assembly is the right shape.

With the spacer ring assembled, I got out the jig saw and rough-cut the subtop to shape. And after gluing and screwing the spacer ring to the subtop, a router and a flush trim bit completes the job.

THE TRAY RING. The next layer you're going to add is the outer tray ring. These pieces form the bottoms of the chip trays. As you can see in the drawing above, the ring is made from mitered pieces of MDF, similar to the spacer ring, with some important additions.

First, since the tray ring forms the outer rim of the top, you'll want to glue hardwood edging to the pieces before they're mitered to length. An ogee profile will be routed onto the edging after the tray ring is assembled (box below).

This ring has to be able to carry the weight of everything above it — the chips, drinks, and elbows — so I added some ¼" hardboard splines to the miter joints for reinforcement. The stopped grooves for the splines can be quickly cut with a slot cutter on the router table (detail 'a'). And finally, before assembling the ring, I drilled two 1"-dia. holes in each ring segment. These "finger" holes simply give you a way to remove the tray liners that you'll add later on.

Following the assembly of the ring (again using a web clamp), I got out a hand-held router to complete the work. The box at lower left shows how to use two different router bits to create a classic ogee profile on the rim of the tray ring. As you'll see later on, the molded edges help create one of the nicest features of the top. So I took the time to get a nice, smooth profile.

After the router is put away, you're ready to add the tray ring to the subtop assembly. The two sections are simply glued and screwed together (detail 'b'). Just make certain the two assemblies are spaced evenly on all sides.

THIN FACING. The final task at this stage is to face the edges of the subtop assembly with hardwood as shown above. This thin facing forms the inside wall of the trays and extends above the subtop to form a "well" that will hold the felt top. After routing roundovers on the outside edges, the pieces are cut to fit and glued in place.

Rout the Ogee Profile

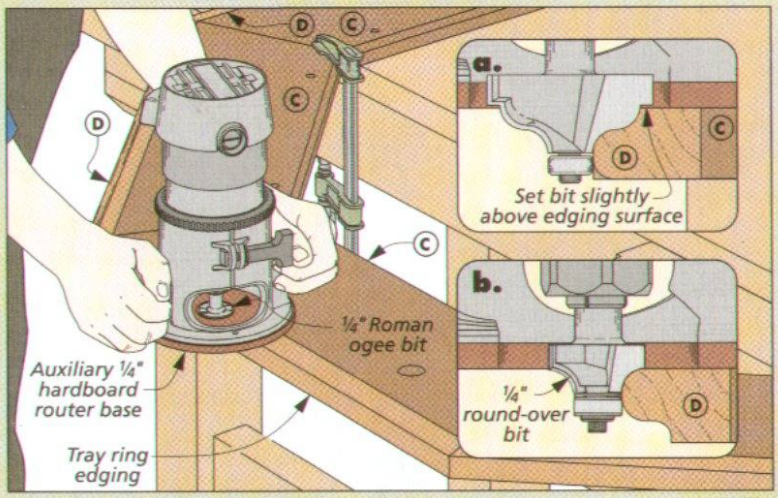

Two Cuts — Two Bits. *To create the profile on the tray ring edging, first rout the top edge using a Roman ogee bit (detail 'a'). Then flip the ring over and complete the profile with a ¼" round-over bit (detail 'b').*

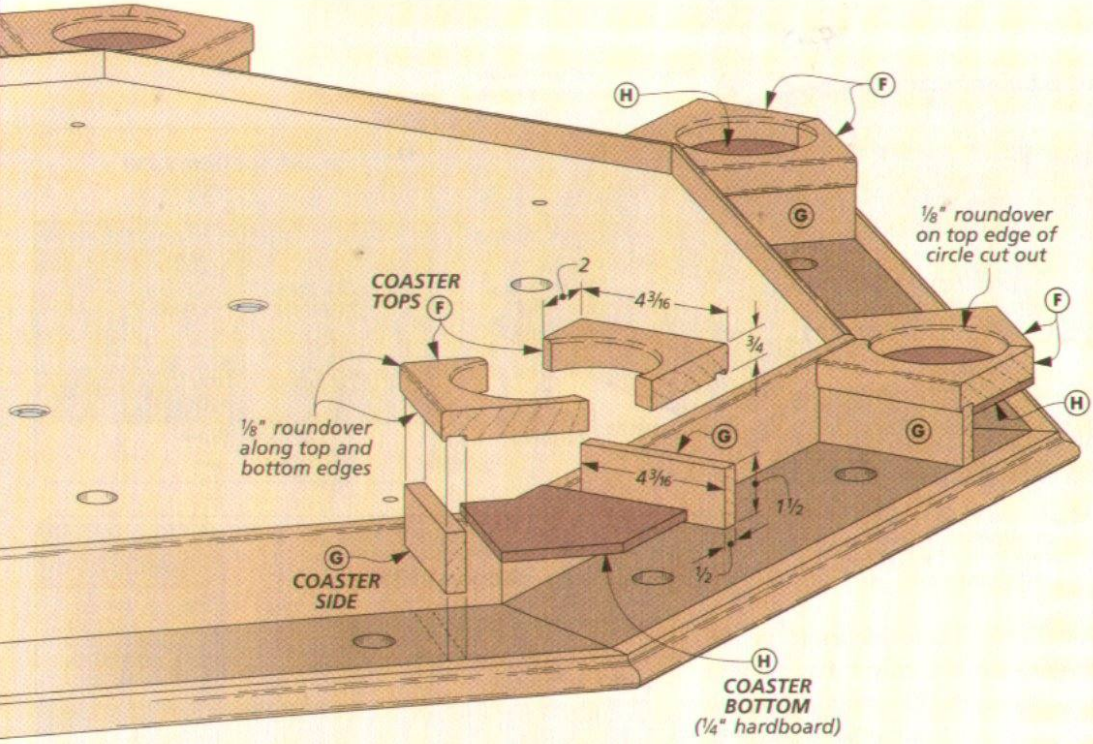

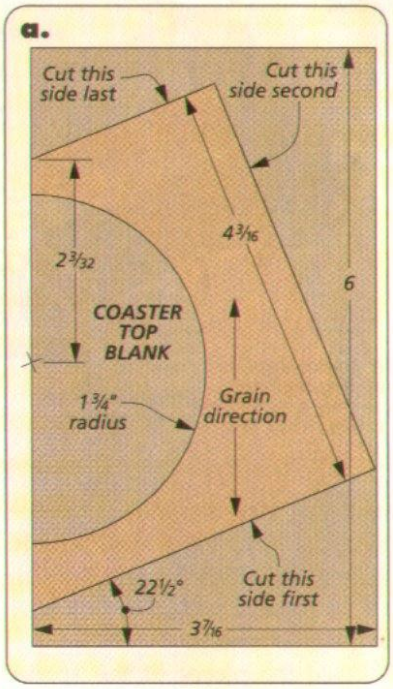

adding the COASTERS

No poker table would be complete without a handy place to set a beverage. So adding drink coasters to the top is the next task.

Each coaster assembly consists of four main parts. The V-shaped top (similar to a chevron) wraps around the corners of the tray facings at the inside and follows the shape of the tray ring on the outside. Two side pieces raise the coaster tops above the tray ring and form the side walls of the trays. A large hole in the top with a hardboard bottom (and later a cork liner) will hold the drink.

THE COASTER TOPS. I started work on the coasters by making the tops. I didn't want fitting the tops to the corners of the tabletop or creating the holes to be too time-consuming. So to simplify things, each top is made as two halves (detail 'a'). Once glued together, they'll look as if they're cut from a solid blank.

The box at the bottom of the page gives you a pretty detailed step-by-step on how to accurately cut the coaster halves to size. It may seem a bit complicated, but you'll find that it goes smoothly.

You'll need 16 identical halves to make the eight coasters tops. Each half starts out as a blank that is

How-To: Cut the Coaster Halves

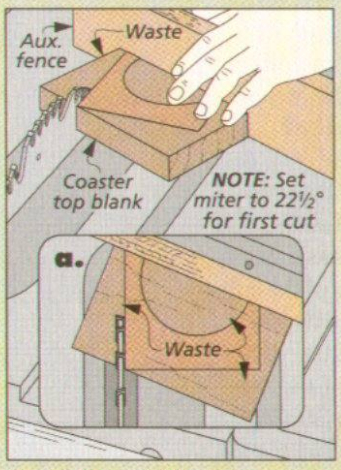

First Cut. *With the miter gauge set at 22½°, make a cut at one end of each blank.*

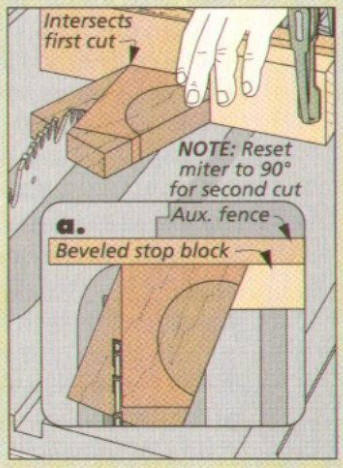

Second Cut. *Return the miter gauge to 90° and make a second cut that intersects the first.*

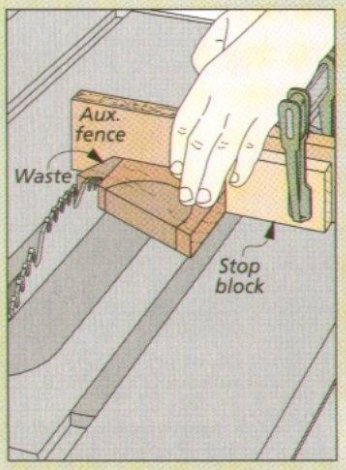

Final Cut. *With the miter gauge still at 90°, the final cut is made parallel to the first.*

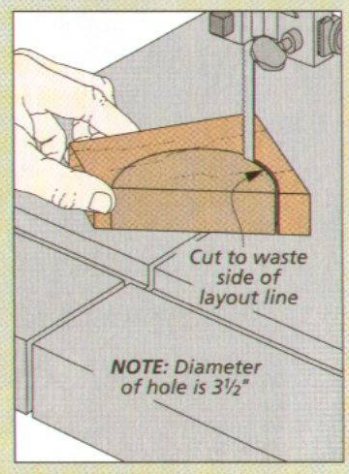

Remove Waste. *Before gluing the halves together, rough-cut the openings on the band saw.*

3 7/16" wide by 6" long. I would suggest cutting a few extras to use as test pieces and spares.

The important thing here is to make the parts as consistently as possible. So I did all the cuts on the table saw "assembly line" fashion. Use the cut on the first piece to set a stop block on the miter gauge. Then you can easily repeat the cut on the remaining pieces. Follow the same routine for the next cuts.

Once you've completed the work at the table saw, the next stop is the band saw. Here you can rough-cut half of the center hole in each piece. Just stay to the inside of your layout line and don't worry about smoothing the cut. This will be taken care of later on.

Now the coaster halves are ready to be glued together. The shape of the tops makes this a bit tricky. But the gluing jig, shown in the photo above, will help you get it done. Just make sure you get the glued edges flush and aligned properly so the coasters will fit well.

DETAILS. Once the tops are glued up, you can finish up the center holes. An MDF template made with a wing cutter on the drill press is the key. The drawing above shows you how this works.

And while I was at the router table, I softened the top edge of the hole and the upper and lower long edges with a 1/8" roundover bit.

Finally, as shown in the left drawing below, I returned to the table saw to complete the tops. Grooves cut in the bottom outside edge of the coaster tops will capture the coaster sides.

THE SIDES. There's really nothing to making and adding the coaster sides to the tops. All you need to do is cut the sides to size from 1/2"-thick stock and glue them into the grooves in the coaster tops.

THE BOTTOMS. At this point, only the hardboard bottoms are left to add. The trick here is shaping them to fit, and the final two drawings below show a quick way to do this. The bottoms are first cut to fit between the coaster sides. Then after gluing them in place, a pattern bit on the router table is used to trim the rough ends. A chisel will finish up the inside corner.

And when they're ready to go, the coaster assemblies are simply glued in their places on the top.

Shop Tips: Glueup and Trimming

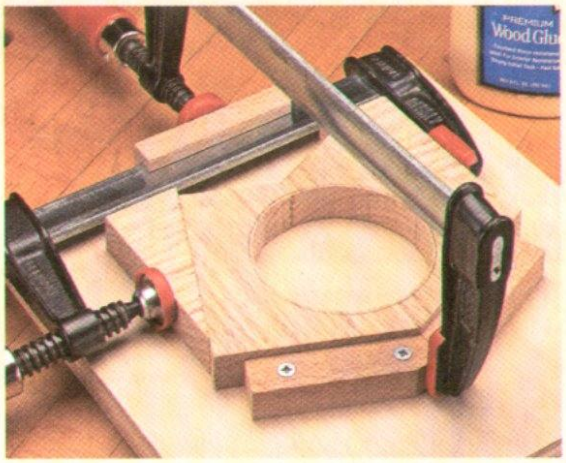

▲ *This jig is just two cleats fastened to a plywood scrap. The "cross" clamp pulls the joint tight while the second keeps the first clamp from slipping.*

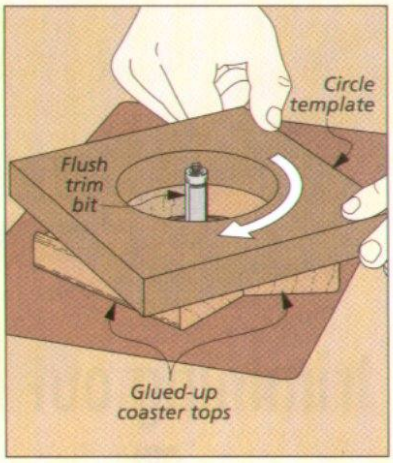

A Perfect Hole. *A template carpet-taped to the coaster top allows you to flush trim a smooth, round hole.*

Complete the Coasters

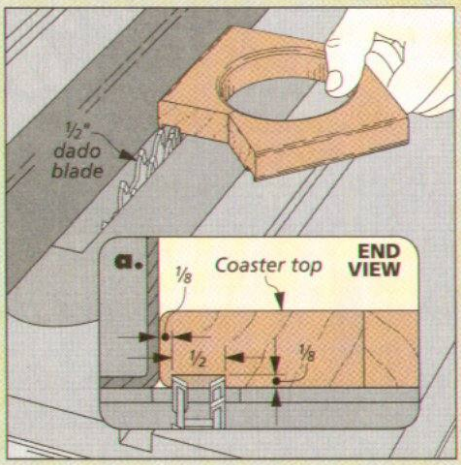

A Pair of Grooves. *A dado blade on the table saw takes care of cutting the shallow grooves that hold the coaster sides.*

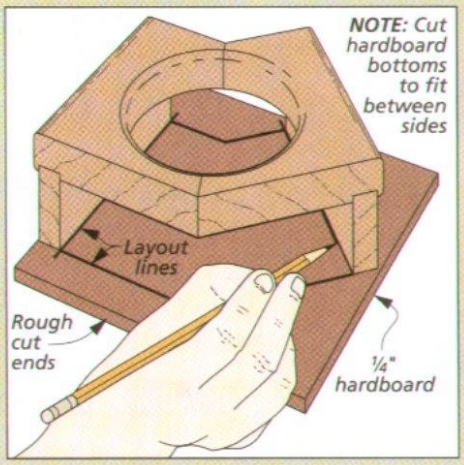

Side-to-Side Fit. *Use the coaster assemblies to mark the side cuts on the bottom blanks. Just rough-cut the two ends.*

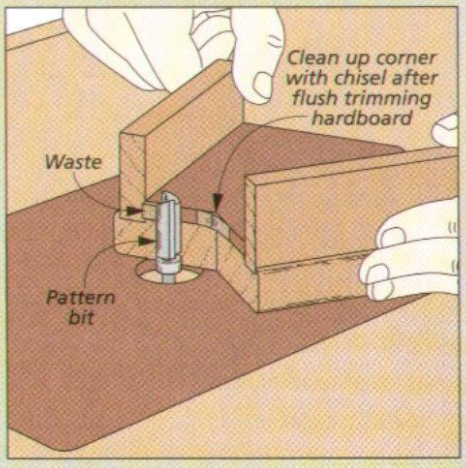

Trim the Ends. *After gluing the bottoms to the coaster tops, a pattern bit on the router table will clean up the ends.*

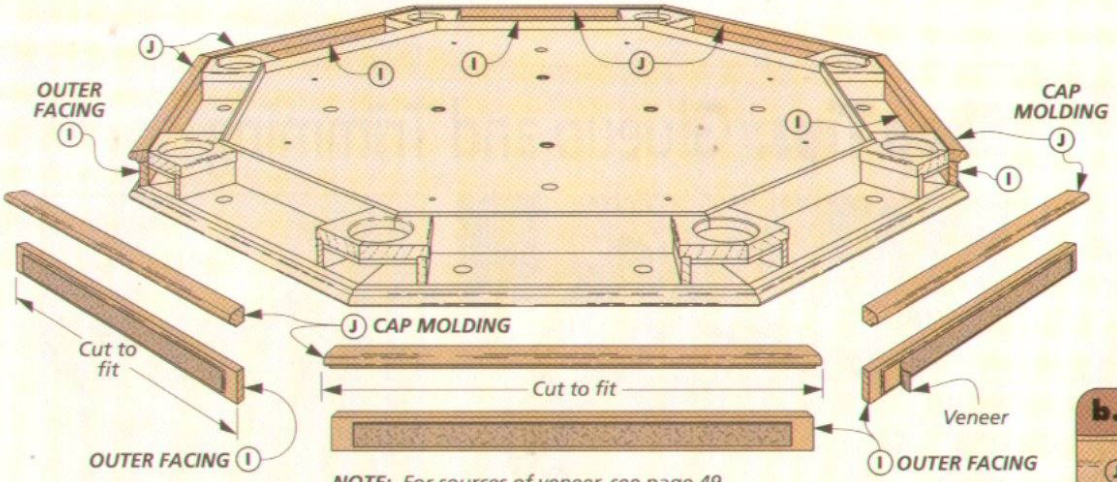

NOTE: For sources of veneer, see page 49

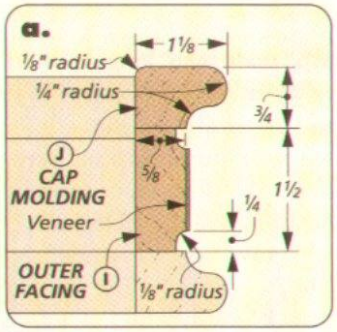

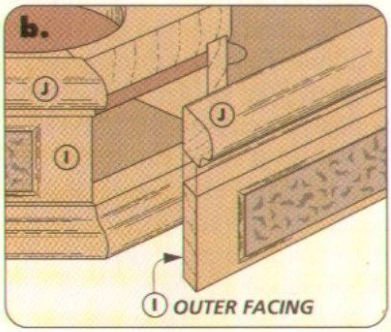

NOTE: Veneer is applied to outer facing before making end cuts and routing raised field

trimming out the TABLETOP

With the coasters completed and in place, the next step is to finish off the outer edge of the top. Take a look at the drawing above and you'll see what's involved. First, you add facing pieces that enclose the trays and coasters. Then the facing is capped with another ogee molding.

OUTER FACING. As you can see in detail 'a,' each outer facing section has a raised field of burl veneer. These facing sections are one of the details that really make this project stand out. But you'll find that the technique used to do the work, shown in the box below, is really pretty easy to follow.

To get going on the job, cut eight facing blanks to width and rough length. Next, glue veneer to the entire face of each blank. And after trimming the veneer, miter the blanks to fit around the coasters.

The final stop is the router table. Here, you'll create the raised field in the center of each blank. Using the miter gauge to steady the blanks, I routed the wide relief on the ends first. And once all the ends are routed, simply readjust the fence to rout the relief along the sides of the pieces.

The facing pieces are now ready to be glued to the top. Just make sure you glue them to the tray ring, the coasters, *and* to each other.

CAP MOLDING. The molding that caps the outer facing mirrors the lower trim. And although the ogee profile on the cap pieces is identical to the tray border below, the way it's made is a little different. These pieces are shaped at the router table before mitering them to fit and gluing them in place.

How-To: Make the Outer Facing

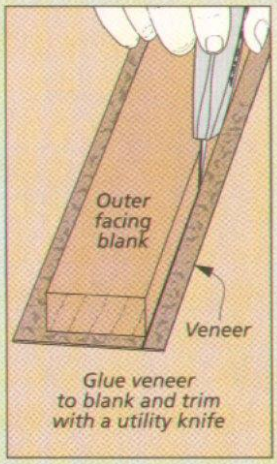

Trim the Veneer. *After applying the veneer, trim it flush with the blank.*

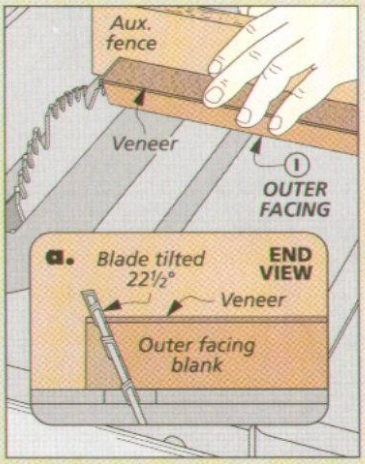

Miter the Blanks. *Next, miter the eight blanks to fit around the coasters on the tabletop.*

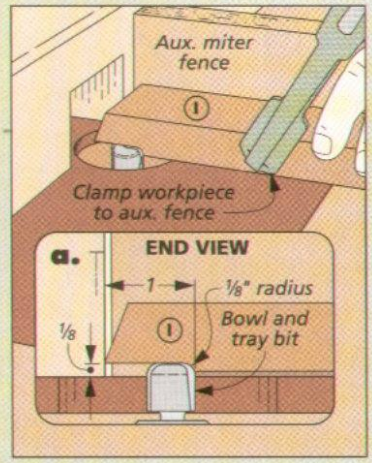

First, the Ends. *It takes several passes over the bowl and tray bit to create the relief on the ends.*

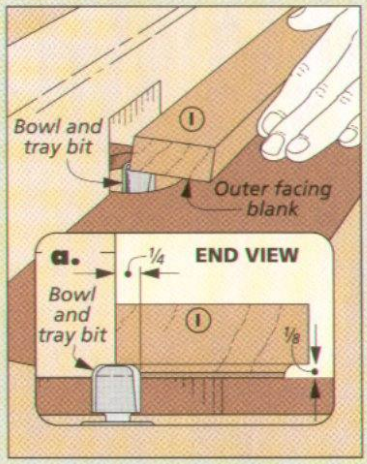

Finally, the Sides. *After resetting the fence, one pass along each side completes the job.*

adding the PEDESTAL BASE

The tabletop is now complete, except for the felt top and liners. But before tackling those "extras," I focused my attention on adding the base.

A pedestal base turned out to be a good choice for a couple reasons. First, it maximizes the amount of legroom under the table, but not at the expense of strength. The sturdy base will easily carry the weight of the top and everything on it.

ASSEMBLY. The pre-made parts I used to build the pedestal made the job go quickly. The legs came with hanger bolts pre-installed. So it's a simple matter to mount the legs to the column. Nuts and washers hold them firmly in place as shown in detail 'a.' If the mounting holes in the column aren't pre-drilled, you'll have to do this first. Sources for the pedestal parts are found on page 49.

Now you need a way to fasten the top to the base. To accomplish this, I bolted a pair of MDF plates to the top of the pedestal to create a sturdy mounting platform. The lower plate is cut to size, chamfered on the bottom edge and then drilled to fit over the column bolts.

If you take a look at detail 'b,' you'll see that the slightly larger upper plate has two sets of holes. The inner, counterbored holes are used to bolt the two plates to the column. A second set of holes is used to fasten the top to the base. These holes should match up with the T-nuts installed in the subtop. To locate the holes, center the top on the assembled base and mark through the holes in the subtop.

Once the base is ready to go, you can set the top in place, align the mounting holes, and then install the bolts to lock it down.

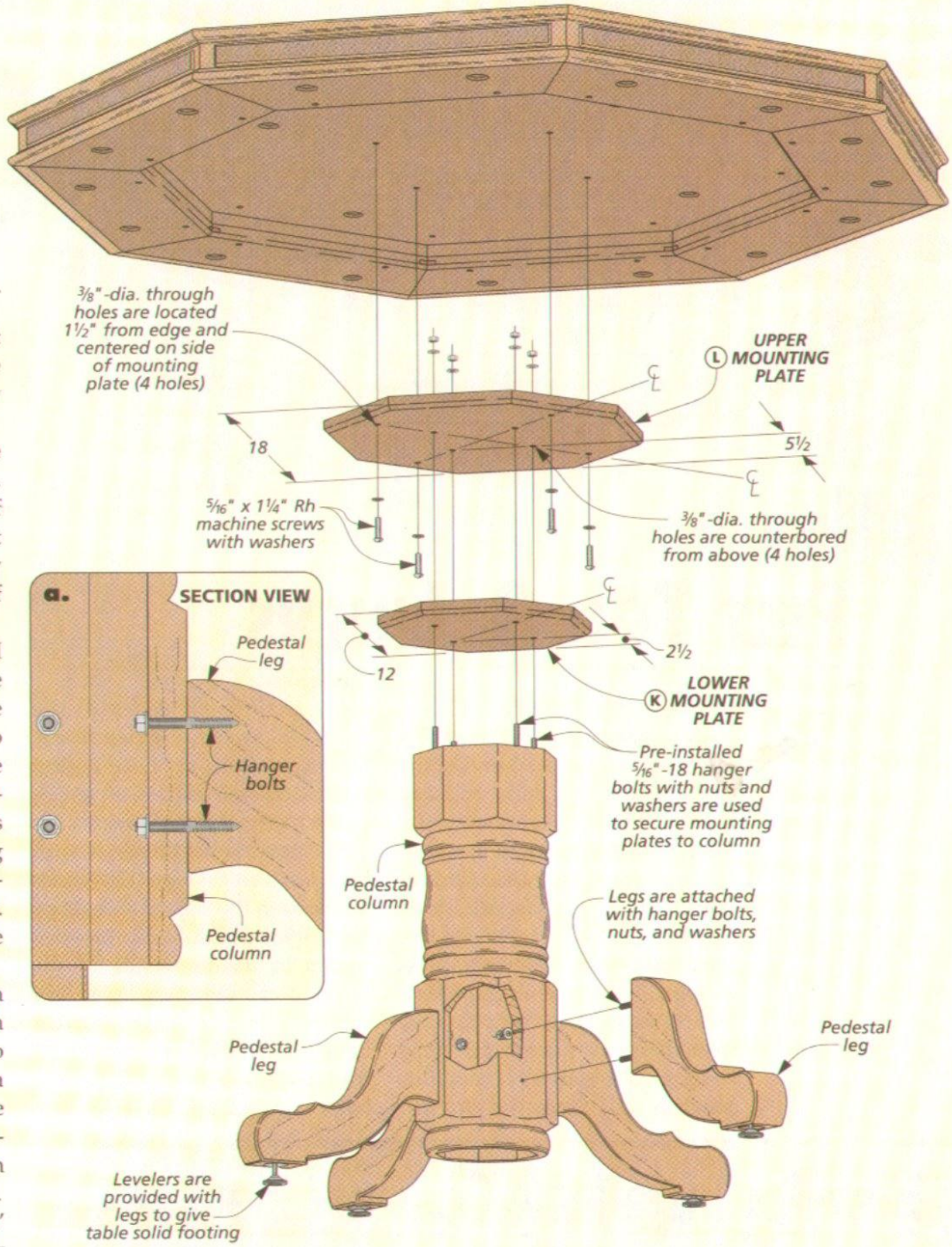

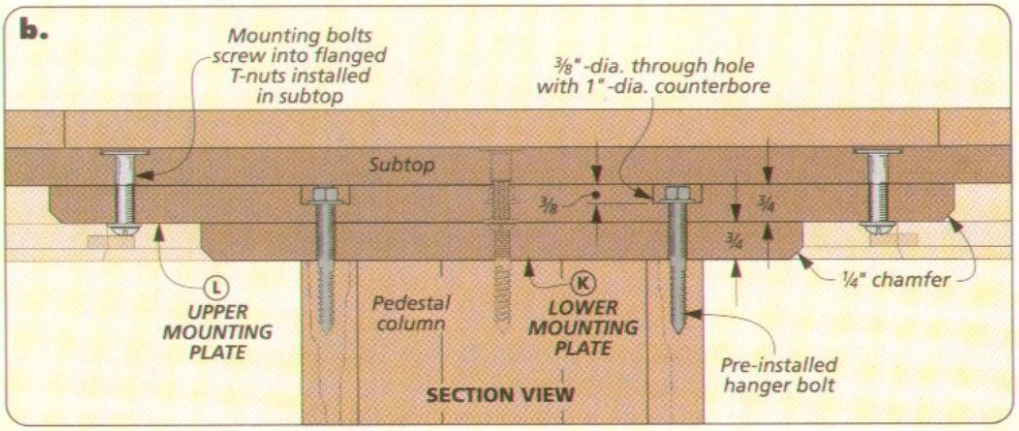

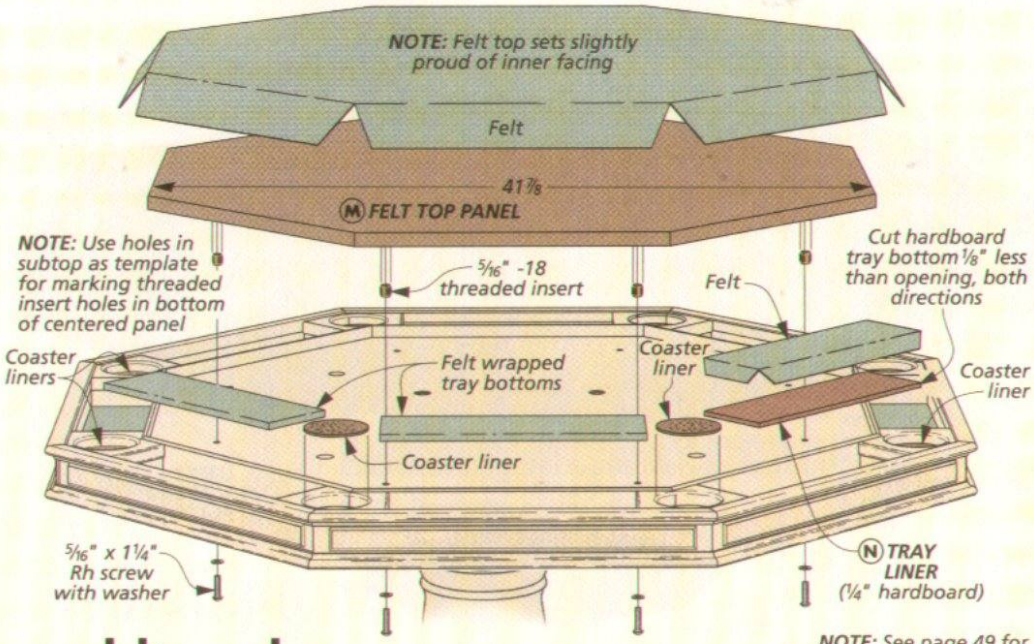

NOTE: See page 49 for sources of poker table felt

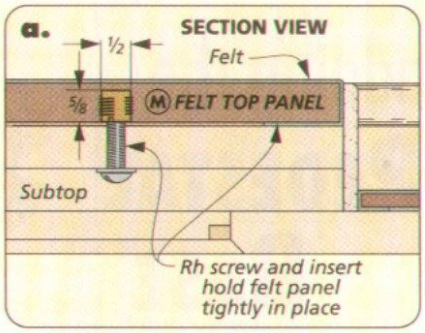

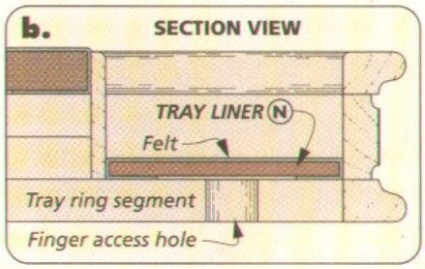

adding the FELT TOP & LINERS

At this point, the table is almost ready to host a game. But before this can happen, you need to add the felt-covered center panel and tray liners, and the cork coaster liners.

THE FELT TOP. During a game of poker, you don't want the cards to slide right off the table. And that's the job of the "poker table" felt top.

As you can see above, the felt is wrapped around and glued to a ¾" MDF panel sized to fit the well created by the inner liners. So you'll need to start by cutting this panel to size. Since the felt will wrap around the edges of the panel, I allowed 1/16" of clearance at each edge. And once I had a good fit, I knocked off all the sharp edges on the panel with sandpaper.

The panel is held in place with bolts installed through the mounting holes in the subtop (detail 'a'). So you'll need to add threaded inserts to the underside of the panel to capture these bolts. You can mark their locations by setting the panel in place and pushing a drill bit through the mounting holes in the subtop. When you drill the holes, be careful not to poke through the top surface. Once the inserts are installed, the panel is ready for its felt covering. You'll find everything you need to know to do it right on page 31.

TRAY LINERS. The tray liners are pieces of ¼" hardboard covered with the same felt used on the top panel. When completed, they're just pressed into place (detail 'b').

COASTER LINERS. The final task is to add cork liners to the coasters. The simple technique I used to do this is explained in the box below. And once you're done, you can either begin work on the finish *or* you may want to first check out the optional cover on the next page.

How-To: Install the Coaster Liners

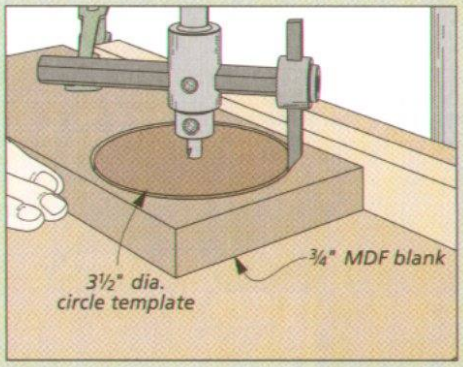

Make a Template. *To get started, I used a wing cutter on the drill press to make a "hole-sized" MDF template.*

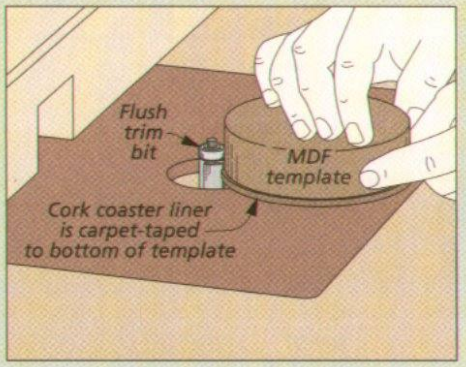

Flush Trim Cork. *Oversized cork blanks are then carpet-taped to the template and simply flush-trimmed to size.*

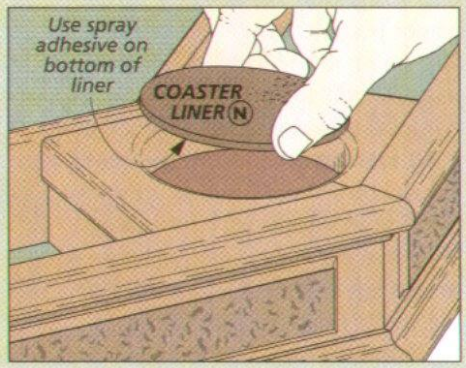

Install the Cork. *Once all the cork disks are made, they can be glued into the coaster holes using spray adhesive.*

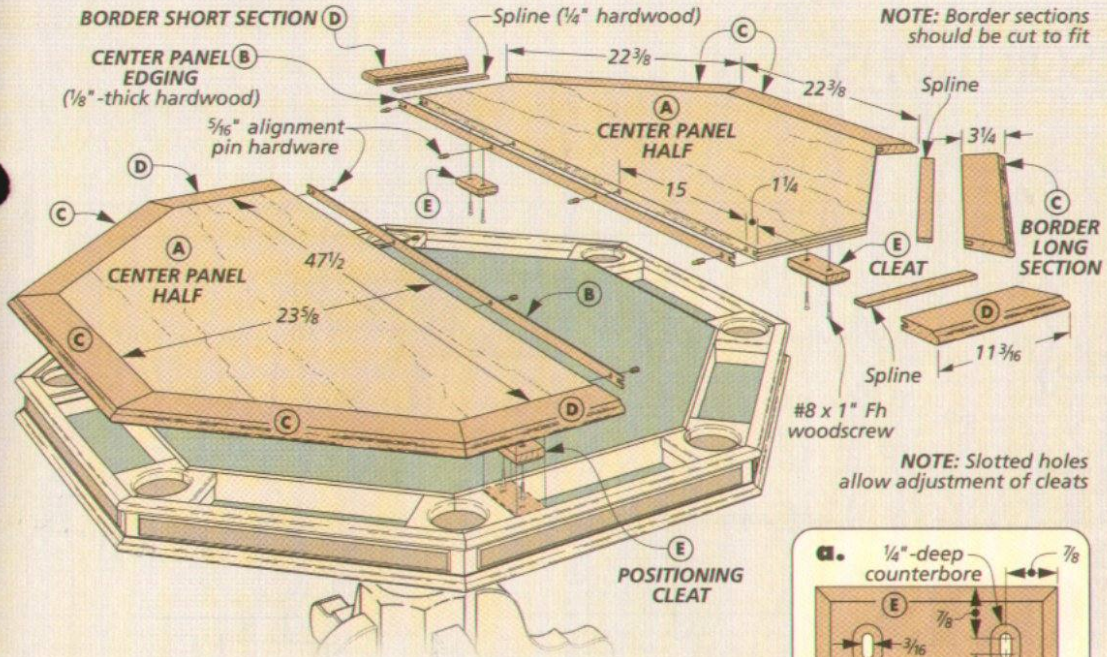

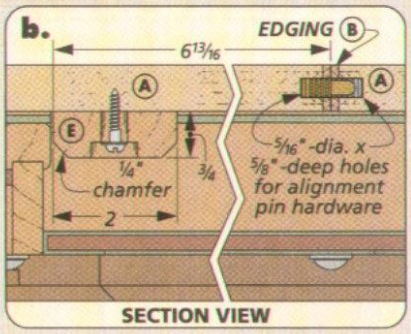

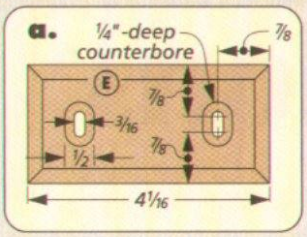

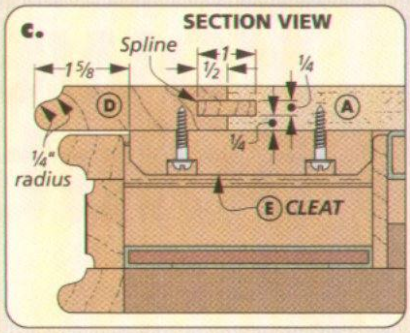

DESIGNER'S NOTEBOOK

Wood Cover

A poker-style tabletop is great for a game of cards, but not for more general use. For this purpose, the optional wood cover shown in the photo below is just the ticket. This top can simply be laid over the poker playing surface. And its handy, two-piece design makes it easy to install *and* to stow away when not in use.

HOW TO. A look at the drawings above will give you a good idea of what the work involves. Start by laying out an octagon on a piece of ¾" plywood and cutting it to shape. Then the panel is cut into two halves (along the grain) and trimmed to the width shown above. Edging strips will hide the two mating plywood edges and create two, complete half octagons.

THE BORDER. Next comes the hardwood border. As you can see, these pieces are mitered to fit around the two panels and joined to it with hardwood splines. You'll find that the splines make the job of installing the border go a lot easier.

So the spline joinery comes first. You want to cut the border pieces to width and rough length. Then a slot cutter on the router will take care of cutting the matching grooves in the border pieces and the top panels. Once the grooves are complete, you can size the splines and then carefully miter the border pieces to fit the panels. Adding the border one piece at a time will work the best. And once in place, the border gets the same edge treatment you used on the poker top trim (detail 'c').

THE ALIGNMENT. The final couple of steps involve keeping the two leaves of the top aligned with each other and with the poker top.

First, as the main drawing and detail 'b' show, four sets of alignment pins are installed in the edges of the two leaves to keep them flush.

Finally, I wanted a way to easily center the game top on the table and keep it from moving. This was solved by adding a pair of cleats to each leaf. They're positioned to drop into a chip tray and lock the top in place, as shown in details 'b' and 'c.' To make positioning the cleats a little easier, the holes and counterbores for the screws are slotted (detail 'a'). W

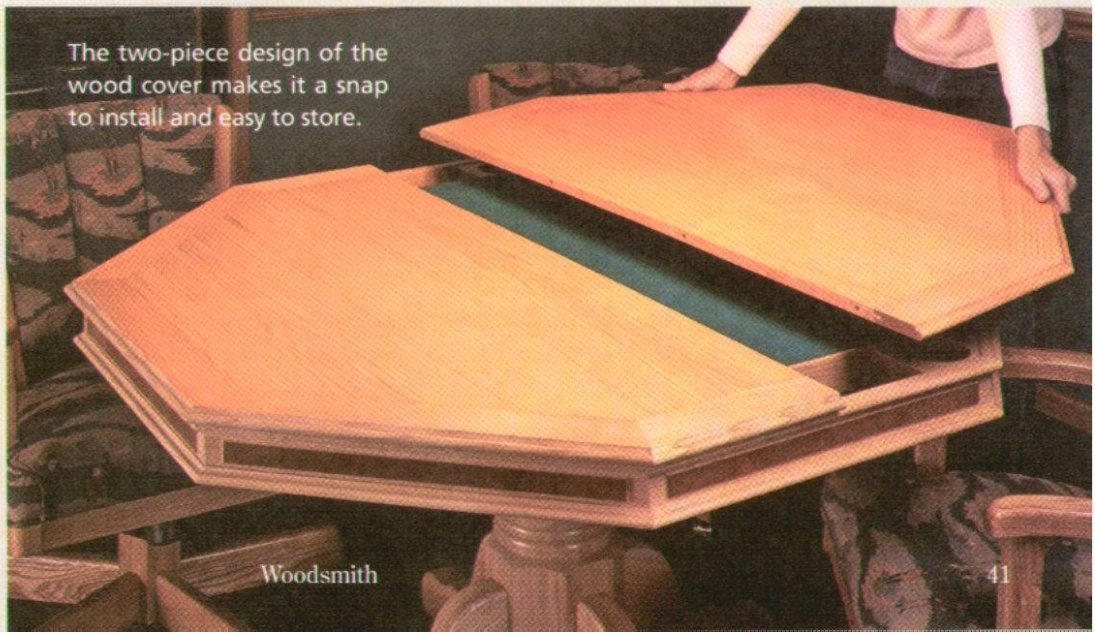

The two-piece design of the wood cover makes it a snap to install and easy to store.

Quick & Easy Power Solutions

3 Great Ways to Manage the Power Sources in your Shop

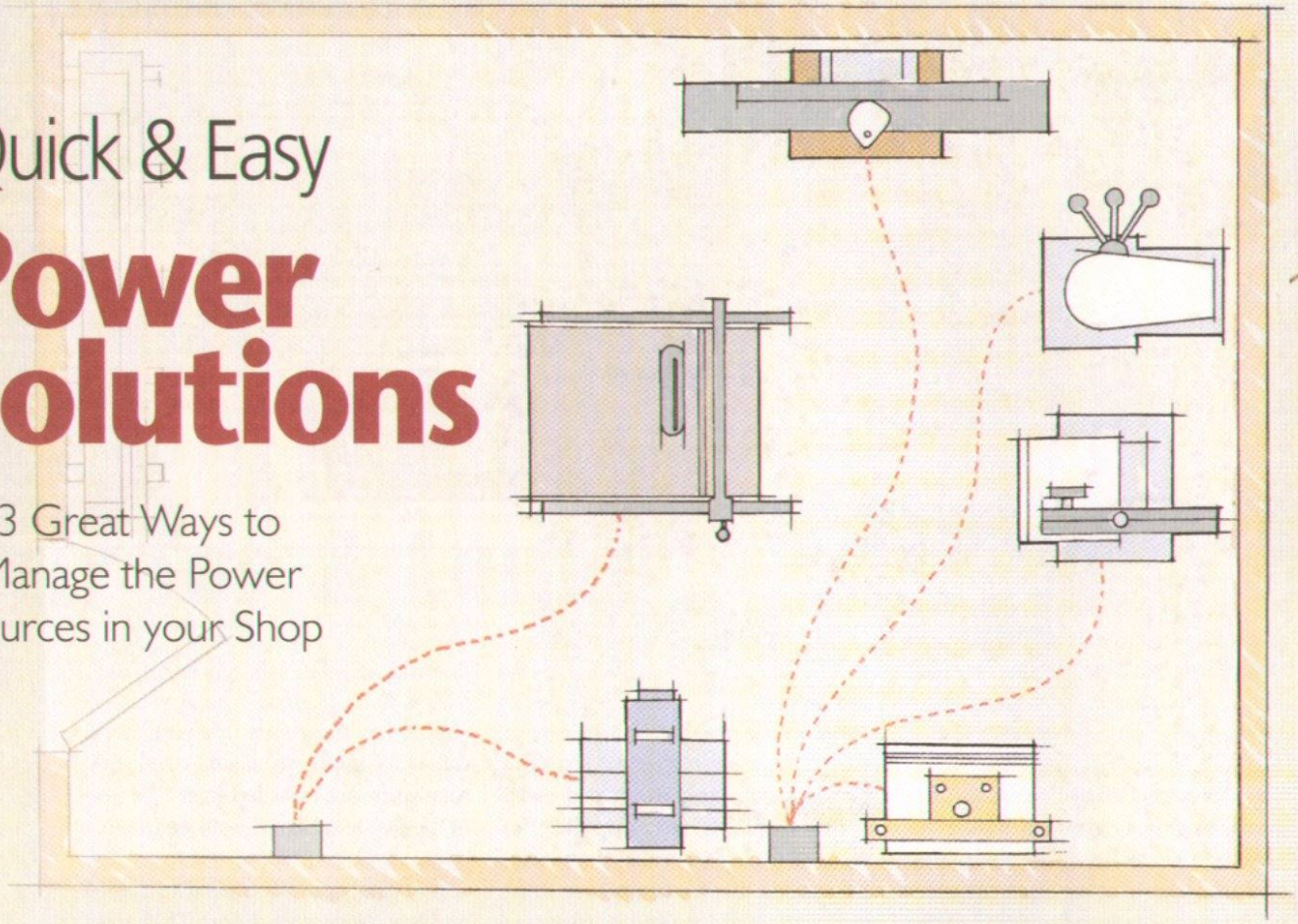

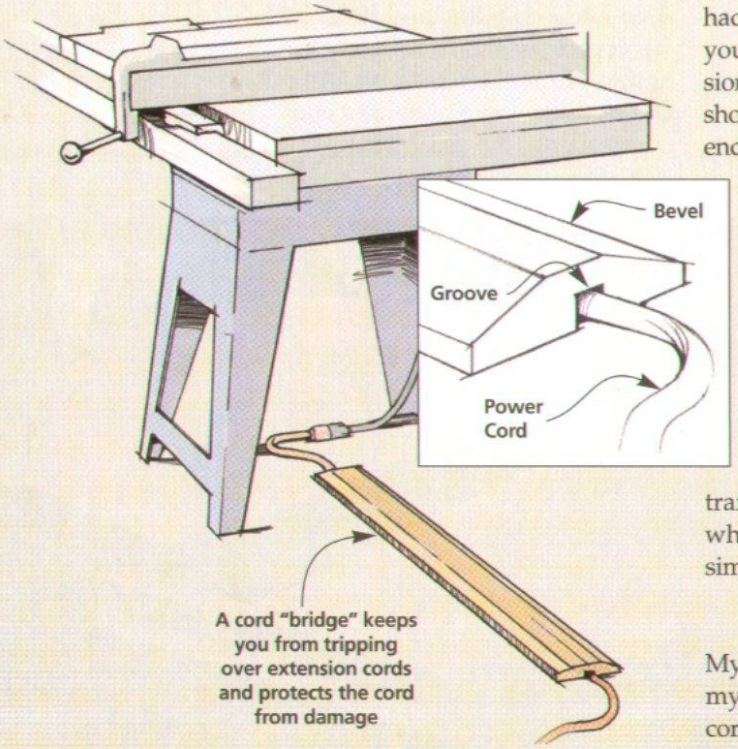

A cord "bridge" keeps you from tripping over extension cords and protects the cord from damage

Wouldn't it be great if every shop had an electrical outlet right where you need it? But let's face it, extension cords are a fact of life in a small shop. The problem is the cords often end up tangled like spaghetti on the floor. Although, you might be able to add outlets, it's not always easy to do. So, the quickest solution is to simply run an extension cord to the tool.

The trick is to get power to each tool safely without interfering with the operation of the tool. This means keeping extension cords out of high-traffic areas, and out of your way when using tools. Here are a few simple ways to solve this problem.

FLOOR CORD PROTECTION

My table saw sits in the middle of my shop floor. The problem is the cord trails across the floor. This creates a bit of a safety hazard because I'm constantly tripping over it. And over time, the cord can become worn and frayed from the traffic. To solve these problems, I made a simple cord "bridge," as in the drawings at left. The bridge covers the cord and prevents me from tripping over it, as you can see in the drawing at left.

It's nothing more than a long board with a groove down the center that I cut with my dado blade. The groove should be large enough so that the extension cord isn't pinched (you could even size it to house more than one cord).

The final detail of the bridge is a bevel that's cut along both edges of the top, like you see in the inset at left. This reduces the chance that I'll catch my foot on the bridge as I walk over it and makes it easy to roll carts across it. Just lay the bridge on the floor and go to work.

OVERHEAD CORD CONTROL

Another option I sometimes use to get power to the center of my shop is to drop a cord from the ceiling. This eliminates the problem of tripping over the cord and provides easy access to the power.

Cord reels are available that hang from the ceiling but they are usually a bit on the expensive side. So when I want a simple and inexpensive way to route an overhead cord, I use an eye bolt and a spring-loaded snap hook, like you see in the drawing and inset at right.

It only takes a few minutes to screw an eye bolt to the ceiling. Then push back the spring-loaded clip and slip the snap hook over the opening in the eye bolt. Open the clip again and slip in the power cord. Now the cord hangs safely in place from the ceiling.

The snap hook keeps the cord from getting in the way. And it provides a stable point to pull the cord over so you can easily adjust the cord length. And it's easy to remove the cord for use elsewhere and snap it back in.

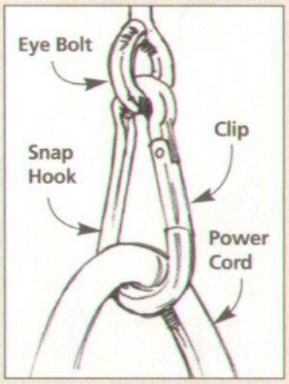

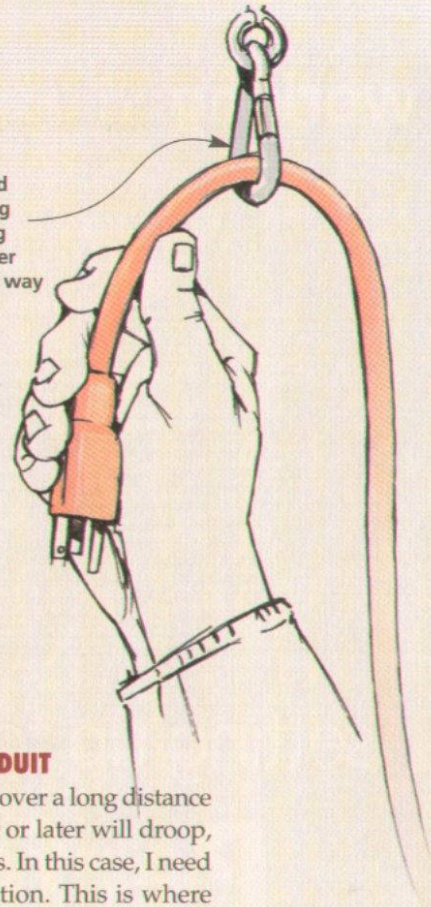
A spring-loaded snap hook hung from the ceiling keeps the power cord out of the way

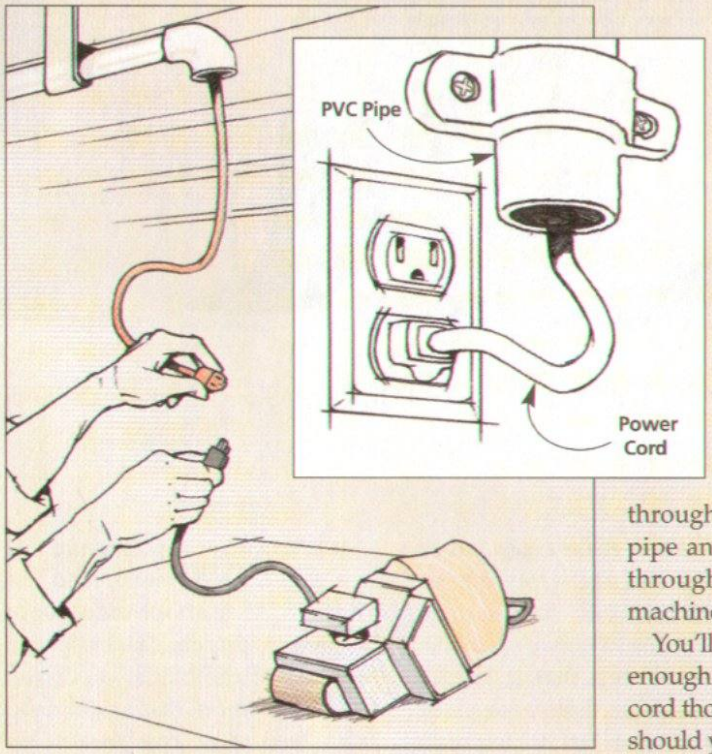

PVC CONDUIT

Extension cords that run over a long distance across the ceiling sooner or later will droop, becoming a tangled mess. In this case, I need a more permanent solution. This is where PVC pipe can help bring a little organization.

To get control of these cords, I simply run some PVC pipe across the ceiling to any areas that need power, like you would electrical conduit. Then I thread the cords through the pipe without worrying about the cords getting in the way.

To do this, attach the PVC pipe to the wall or ceiling. Then you can usually push the cord through the pipe. If you can't push it through, you can pass a length of wire through the pipe and attach it to the plug end. Then just pull it through the length of pipe and connect it to the machine or tool you want to use.

You'll want to be sure to select PVC pipe that's large enough to allow easy passage of the plug end of the cord though the pipe. This will let you remove the cord should you want to use it at another location W

Power: Where You Need It

One of the most useful fixtures in my shop is a small, rolling workbench with a power strip attached to one side. It makes a handy workbench or assembly table. But I also use it as a mobile source of power in my shop. I can roll it anywhere I need an extra outlet.

I attached a power strip to a wood base and mounted it to the front of the bench (drawing at right). Then I added a ¼" hardboard top with a notch cut at each end. The top prevents sawdust from falling into the outlets and the notches make it easy to wrap up the cord for storage.

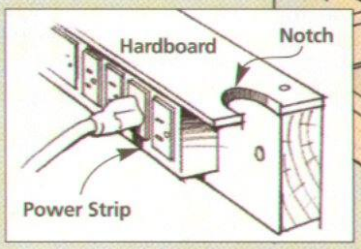

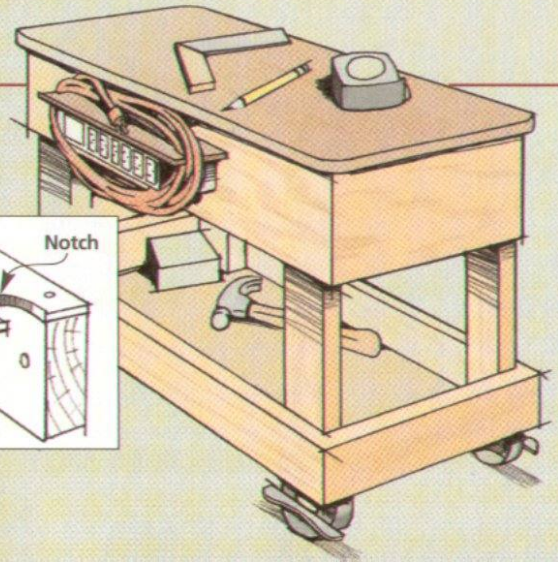

setting up for the Perfect Cut

Getting accurate cuts starts with the basics — making sure your blade is in good condition and properly installed on your saw.

When it comes to getting accurate cuts on the table saw, most of us think about positioning the rip fence or adjusting the miter gauge so it's dead on. But before you even get to that point, you need to make sure that your saw blade is properly installed. And this includes checking to see that the parts holding the blade — the arbor, arbor nut, and flanges, are in top shape.

INSTALLING THE BLADE. Installing a blade on a table saw may seem like such a basic step that it hardly deserves mention. But believe it or not, the manner in which you install a saw blade can directly affect the accuracy of your cuts.

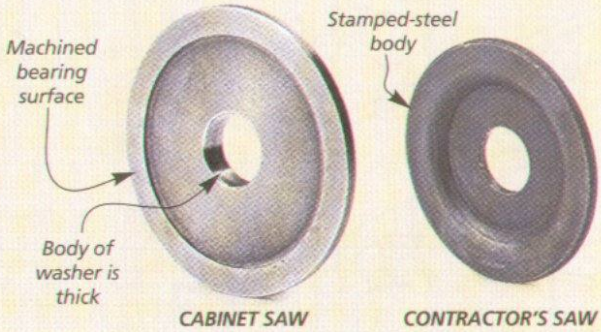

▲ Cabinet saws typically have thick, machined flange washers (left). Less expensive saws have stamped washers like the one on the right.

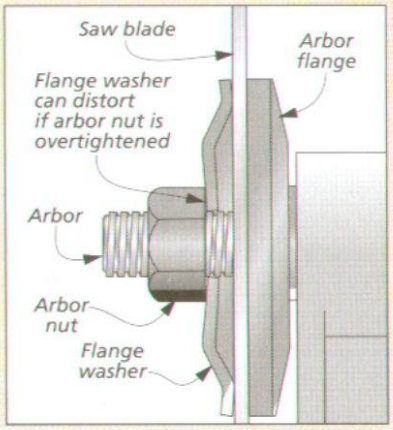

First, you want to make sure that your saw blade is clean. And I'm not just talking about the teeth of the blade. In this case, take a look at the body of the blade, especially the area around the arbor hole. Pitch and dirt can build up around this hole, preventing the blade from fitting up tightly against the arbor flange. This can create runout in the blade and cause it to "wobble." A spray-on blade cleaner can be used to remove the pitch buildup.

As you slip the blade onto the arbor of the saw, be careful not to strike the teeth of the blade against the throat opening of the saw. Carbide teeth are brittle and can chip easily. Slide the blade all the way onto the arbor and then slide the flange washer up against the blade.

Now thread the arbor nut on by hand until it's finger tight. You can finish tightening the nut with the arbor wrench. But don't overdo it, a quarter turn or so is all you need.

HOW TIGHT? You may be tempted to overtighten the arbor nut, just to make sure the blade doesn't accidentally come flying off when you turn the saw on. But this really isn't necessary. Because the arbor spins in the opposite direction of the threads, the arbor nut can't fly off while the saw is running. So all you need to do is snug the nut down securely.

With some saws, you can actually "overtighten" the arbor nut. Many contractor's saws have flange washers that are stamped out of sheet steel (see photos at lower left). If you overtighten the nut against one of these washers, you risk distorting the washer (see drawing on opposite page). Overtightening the arbor nut can also make it difficult to remove when you want to change the blade.

REMOVING THE BLADE. Of course, what goes on must come off. And while removing a saw blade doesn't affect the accuracy of a cut, just remembering which way to turn the wrench can be confusing. If you have a right-tilt saw, the arbor will have a reverse thread. Left-tilt saws have standard (clockwise) threads. But all you have to remember is that no matter what kind of saw you're using, you always turn the wrench toward the front of the saw to loosen the arbor nut.

To remove the blade, I use a scrap of wood as a "brake" to prevent the blade from turning while loosening the nut (see main photo on opposite page).

And if your table saw came equipped with a straight, stamped-steel wrench to remove the blade, you can give yourself a little more knuckle room by putting a slight bend in the end of the wrench.

MAINTENANCE. In order to maintain the accuracy of your table saw, it's a good idea to periodically check the condition of the arbor, arbor flange and the flange washer.

Feel the surface of both flanges for any burrs or nicks and carefully file them down if necessary. Remove any dirt or pitch buildup with an abrasive pad or some fine sandpaper as shown in the drawings below. A small, brass brush can be used to clean the threads on the arbor and the arbor nut.

While these things may seem like minor details, they really don't take much time. And they'll ensure that all your table saw cuts start off on the right foot. W

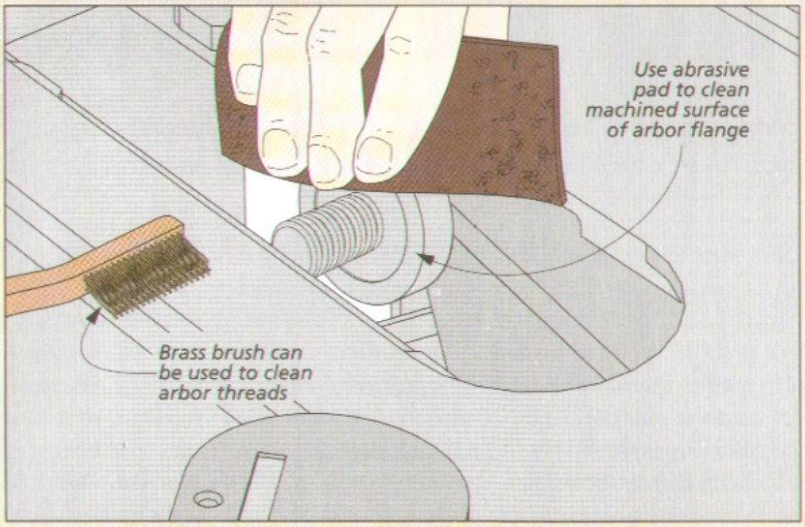

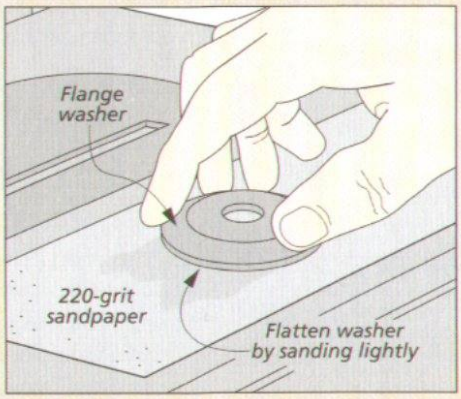

Getting a Grip: Blade-Loc

We all know the drill. When it's time to change a saw blade, the first thing you do is to look around the shop floor for a block of wood to wedge against the blade while you loosen the arbor nut.

Now there's nothing wrong with this method. But sometimes, there just isn't a block of wood handy. And even if there is, you still have to worry about accidentally striking the blade with the arbor wrench. Or worse, scraping your knuckles over the teeth of the blade. That's where the *Blade-Loc*, by *Bench Dog Tools*, comes in.

Made of a tough plastic, the *Blade-Loc* fits over the top of your saw blade, allowing you to safely place your hand over the blade and hold it securely in place while loosening or tightening the arbor nut, see photo at right.

The *Blade-Loc* is available through several woodworking tool catalogs. For sources, see page 49.

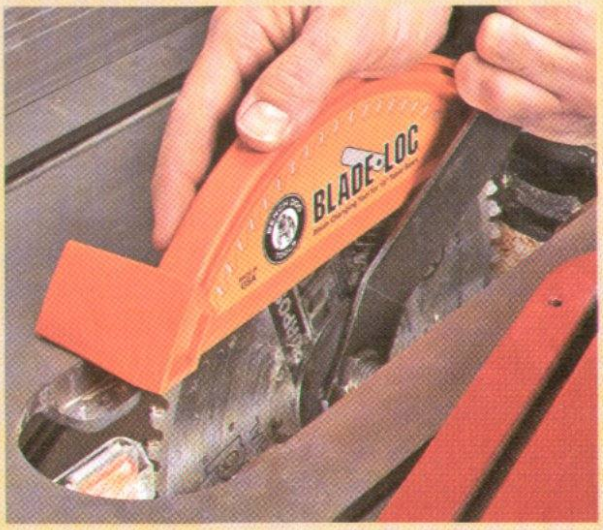

4 Finishing Brushes
no shop should be without

A flawless, brushed-on finish starts with the right tool. And all you need is a small collection of brushes to handle any type of finish on any project.

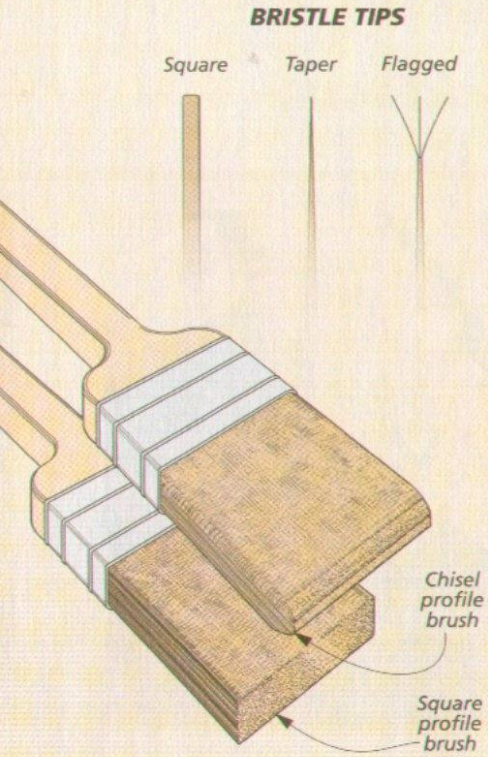

Sometimes the quality of the job is only as good as the quality of the tools you use. And I've found this is especially true when applying a brushed-on finish. To lay down a smooth, even finish, you need to use the right brush.

BRISTLE BASICS. Before you can choose a tool for a job, it helps to know a little bit about the business end of a brush — the bristles.

The bristles on a brush come in two basic types — natural or synthetic. Natural bristles are simply the hairs from animals. A lot of types of animal hair is used for this purpose, but the most common and useful for finishing are the soft, white bristles that come from hogs — called white China (photo above). These bristles have the ability to hold a large amount of finish and release it evenly. They're your best bet for solvent-based finishes like varnish, lacquer and shellac.

Your other choice is synthetic bristles. These are made from polyester and nylon. The advantage to synthetic bristles is that they won't absorb water and become floppy like natural bristles. This makes them ideal for use with today's water-based finishes.

BRISTLE SHAPE. The bristles on a brush come in different shapes as shown at left. They can be straight or tapered along their length and sometimes the ends of the bristles are split or "flagged." A tapered bristle is strong at the base but flexible at the tip. The split ends of flagged tips, usually found on natural bristles, hold more finish and spread it smoother. Synthetic bristles can be straight or tapered and generally lack flagged tips.

BRUSH SHAPE. The profile of a brush can be squared off or chiseled (tapered) as shown in the lower drawing at left. Simply put, chiseled brushes work better. The taper of this type of brush allows more bristles to contact the surface for a smoother finish.

What it comes down to is there isn't one brush that will handle every job. But, with just the small collection of brushes shown on the following page, you can handle almost any finishing task that comes along.

1 Wide China Bristle

Whenever I'm faced with brushing a varnish, lacquer, or shellac on a large project, I get out a 2½"-wide, white China bristle brush like the one shown at right. It's the perfect tool for applying all types of solvent based finishes to large, flat surfaces with professional results.

Brushing big projects is a challenge. Any brush marks or lap marks on a tabletop or cabinet can stick out like a sore thumb. So your goal is to apply a full, even coat of finish before it starts to tack up.

To do this, you need a brush that holds a large amount of finish and then releases it on the surface as smoothly and evenly as possible. And this is exactly what this type of brush is designed to do. The width of the brush allows me to cover a lot of ground quickly and the soft, flagged tips lay down the finish ever so smoothly.

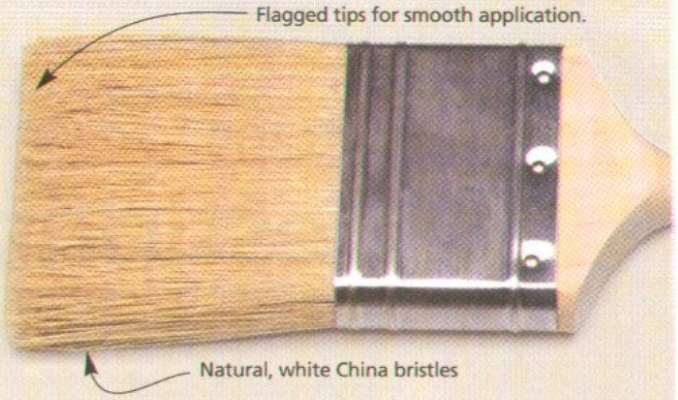

▲ A wide, white China bristle brush is your best bet for laying out a brush mark-free finish on large surfaces. The soft, flagged tips will hold a lot of finish and then release it evenly as you brush.

2 Small Angled China Bristle

One of the keys to great results from a brushed-on finish is to lay on the right amount of finish and to do it smoothly. On smaller projects or projects with a lot of detail, this isn't always easy. You have narrow edges, corners and molded profiles that have to be covered without leaving brush marks, drips and runs.

That's why I keep a 1½"-wide China bristle angled sash brush in the finishing cabinet. This brush's size and shape give it a few advantages over its big brother above.

You can see that it's narrower in width but it's also quite a bit thinner. This means it will hold less finish and so gives you a good handle on the amount of finish you apply — exactly what's needed for smaller work. And the angled end of a sash brush lets you get into tight areas where a square-ended brush would just make a mess.

▲ A small, white China angled sash brush can save the day when you need to do a good job of brushing fine details. This brush allows you to precisely apply an even coat of finish in spots a larger brush can't handle.

3 Synthetic Bristle Sash Brush

If you're like me, you find yourself opening a container of clear water-based finish more and more often. These finishes can offer some nice advantages. They're fast drying, "crystal" clear, pretty durable and easy to clean up. You can put a quality finish on a large project in a short amount of time.

But when it comes to applying water-based finishes, a good quality synthetic bristle brush is a must. Unlike natural bristles, synthetic bristles are waterproof. They'll hold their shape in water-based finishes and allow you to lay down the finish with perfect control.

My choice here is a 2" or 2½"-wide angle sash brush as in the right photo. This size brush does double duty. Its width allows you to cover large areas quickly and the angled shape lets you easily cut in edges and get into the corners.

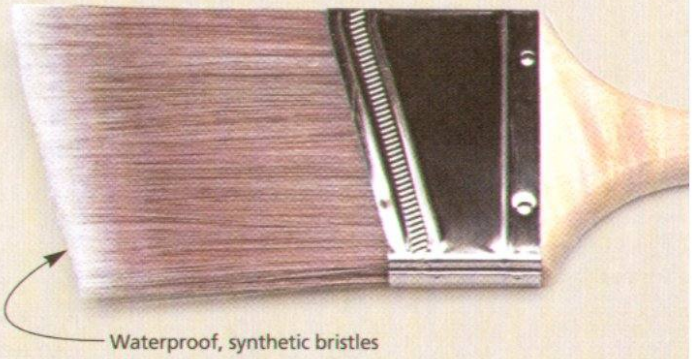

▲ Look for a synthetic bristle, angled sash brush for use with water-based finishes. You'll find a good one at a paint or home improvement store for about $12 to $15.

4 Artist Brush Assortment

You might think the collection of artist's brushes shown in the photo at right would be out of place in a woodworking shop. But once you pick up a few, you'll consider them indispensible.

I put these brushes to use in a couple ways. A larger, flat artist brush, like the top brush in the photo, is handy for brushing finish on small projects and getting into tight spaces. It can make an easy job of small knobs and moldings, and fine details. And its synthetic bristles make it versatile.

The small, round brushes (lower in photo) earn their keep when any kind of touchup work needs to be done. I use them for spot staining, touching up scratches or dimples in a finish — any time a super-fine touch is needed. W

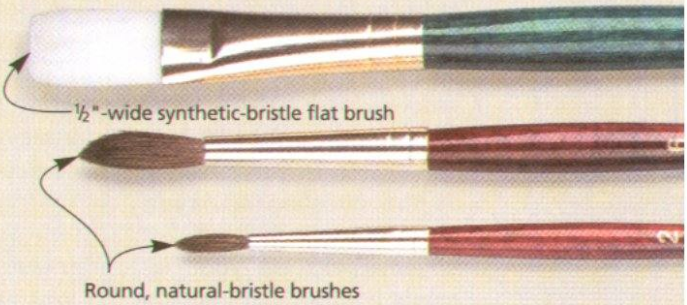

▲ Small artist's brushes can take on a number of finishing duties. They can be purchased in sets for under $10 at hobby and art supply stores.

Questions & Answers

Buying Used Tools

Q ***Occasionally, I run across old woodworking equipment at garage sales and auctions. Even though the prices seem reasonable, I've always been wary about buying something used. What do you think?***

Herb Gross
San Diego, California

A Buying used woodworking equipment can be an attractive proposition when you consider that used tools sometimes sell for half (or even less) than the cost of new ones.

On top of the savings, many older tools were built with lots of cast iron and heavy-duty components that you just don't find today.

But before you begin combing the classified ads in search of tool bargains, here are a few basic pointers to get you started.

GET THE FACTS. First, try to find out as much information as you can about the tool. How old is it? How often was it used? Why is it being sold? To help determine the value of the tool, it's a good idea to know the price of a comparable new tool.

INSPECTION. The second thing you want to do is give the tool a thorough going over. Look for any obvious signs of damage, such as broken parts. Small parts, like knobs or fasteners, can usually be replaced easily. But I typically avoid tools with main castings that are cracked or broken.

Check the motor, switch, and wiring to make sure they're in good condition. If possible, run the machine to see how it performs under power.

If you discover any missing, broken, or worn-out parts, check to see if you can still get replacements. If the manufacturer is no longer in business, trying to find spare parts may be tough.

AFTER THE SALE. It's a safe bet that any used tool you buy will require a little elbow grease to put it back into shape. This can be as simple as a light dusting off and a tune-up. But other tools may need a total restoration: including disassembly, painting, replacement of bearings, and then final reassembly.

If you're going to take on a project like this, an excellent resource is the Old Woodworking Machines website (www.owwm.com).

There you can view owner's manuals, catalogs, photos, and all sorts of valuable information on old woodworking equipment. There's even a link to a discussion group where you can ask questions about restoring old machines. W

Do you have any questions for us?

If you have a question related to woodworking techniques, tools, finishing, or hardware, we'd like to hear from you.

Just write down your question and mail it to us: Woodsmith, Q&A, 2200 Grand Avenue, Des Moines, Iowa 50312. Or you can email us the question at: woodsmith@woodsmith.com.

Please include your full name, address, and daytime telephone number in case we have questions.

Sources

FORSTNER-STYLE BITS

You can find Forstner-style bits at most hardware stores and home centers, and we've also listed a few sources in the margin at right. When it comes to true Forstner bits, however, there's only one source — *Connecticut Valley Manufacturing Company*. You can contact the company by calling 860-827-0823 or visit the website: www.convalco.com.

BELT SANDER ACCESSORIES

When it comes to upgrading your belt sander, one thing to consider is covering your platen with a graphite pad. It will reduce friction and extend the life of the sanding belt and the sander itself. We ordered ours from *Klingspor*. You can find the contact informtaion in the margin at right. The company also stocks a variety of sanding belts to fit most sanders.

As for the sanding frame, check with the manufacturer of your belt sander to see if there's one available for your model.

ROUTER GUIDE BUSHINGS

If you decide to try your hand at template routing with guide bushings, you can start by ordering individual bushings or sets (in steel or brass) from the *Woodsmith Store* or *Rockler*.

HALL TABLE

Except for a handful of screws, there really isn't any hardware you need to build the hall table. The only unusual thing we used was India ink to ebonize the legs. It's waterproof and offers a deep, black color. You can find it at most hobby and office supply stores.

POKER CHIP CASE

Building the poker chip case on page 22 requires a few pieces of hardware. All the hardware came from *Lee Valley*. You'll need a pair of round table latches (#00A51.04), a package of table leaf alignment pins (#00S10.04), four brass bin pulls (#00W82.02), and a set of brass box feet (#01B07.04).

If you'd like to veneer the top, you can order some from *Herzog Veneers*. We used a type called plane tree burl veneer. The contact information is in the margin at right. On the website, you'll be able to see a photo of the exact piece of veneer you're ordering.

As for the poker supplies, you can probably find them at a local game store. The chips, markers, and felt shown in the article came from *Poker 'n Stuff*.

To rout the profiles, we used an ogee fillet bit from *Amana* (#54114), which is available at the *Woodsmith Store*.

POKER TABLE

Almost all of the supplies you need to build the poker table on page 32 came from *Rockler*. For starters, you'll need an oak pedestal (#30283) and leg set (#37217). We also ordered some cork (#15108) to line the coasters, and a package each of T-nuts (#26062) and threaded inserts (#33191). In addition, the *Woodsmith Store* carries these supplies as well. If you plan on making the wood top, you'll need a package of table leaf alignment pins (#00S10.04) from *Lee Valley*.

Like the poker chip case, the felt (#HF-GFELT) for the replaceable top came from *Poker 'n Stuff*, and the accent veneer came from *Herzog Veneers*.

The profiles on the table were routed with an ogee fillet bit (#54114) and a bowl and tray bit (#45981) from *Amana*. Both bits are available from the *Woodsmith Store*.

Online Customer Service

Click on Subscriber Services at ***www.woodsmith.com***

- Access your account status
- Change your mailing or email address
- Pay your bill
- Renew your subscription
- Tell us if you've missed an issue
- Find out if your payment has been received

MAIL ORDER SOURCES

Similar project supplies may be ordered from the following companies:

Rockler
800-279-4441
rockler.com
Forstner-Style Bits, Router Guide Bushings, Oak Pedestal, Pedestal Leg Set, Cork, T-Nuts, Threaded Inserts

Woodsmith Store
800-835-5084
woodsmithstore.com
Amana Router Bits, Blade-Loc, Forstner-Style Bits, Router Guide Bushings, Oak Pedestal, Pedestal Leg Set, Cork, T-Nuts, Threaded Inserts

Herzog Veneers
336-434-4053
herzogveneers.com
Veneer

Klingspor
800-228-0000
woodworkingshop.com
Graphite Platen, Router Guide Bushings, Sanding Belts

Poker 'n Stuff
888-244-7788
pokernstuff.com
Clay Poker Chips and Markers, Poker Table Felt

Lee Valley
800-871-8158
leevalley.com
Blade-Loc, Brass Bin Pulls, Brass Box Feet, Table Latches, Table Leaf Alignment Pin

Amana Tool
800-445-0077
amanatool.com
Router Bits, Router Guide Bushings

Bench Dog
800-786-8902
benchdog.com
Blade-Loc

WOODSMITH PROJECT SUPPLIES

We now feature hardware from **ROCKLER** in many of our new project kits. To order, please use our toll-free order line, see below. It's open Monday through Friday, from 8 AM to 5 PM Central Time. Before calling, please have your VISA, MasterCard, Discover, or American Express card ready.

If you would prefer to mail in an order, please call the toll-free phone number below for more information concerning shipping charges as well as any applicable sales tax.

Woodsmith *on the web*

- "Online Extras" - Plans, Patterns, & More
- Over 100 Woodworking Tips Online
- Visit Our Readers' Project Photo Gallery
- Project Plans You Can Download
- Catalog of Project Kits, Tools, Jigs, & Plans
- Forums for Woodworking, Tools, & Classifieds
- Links to Other Woodworking Sites

Call us at 1-800-444-7527 or online at www.woodsmith.com

an inside look at Pedestal Bases

Strong and sturdy, pedestal bases make for great tables. Which is why you'll want to discover the secrets to how they're constructed.

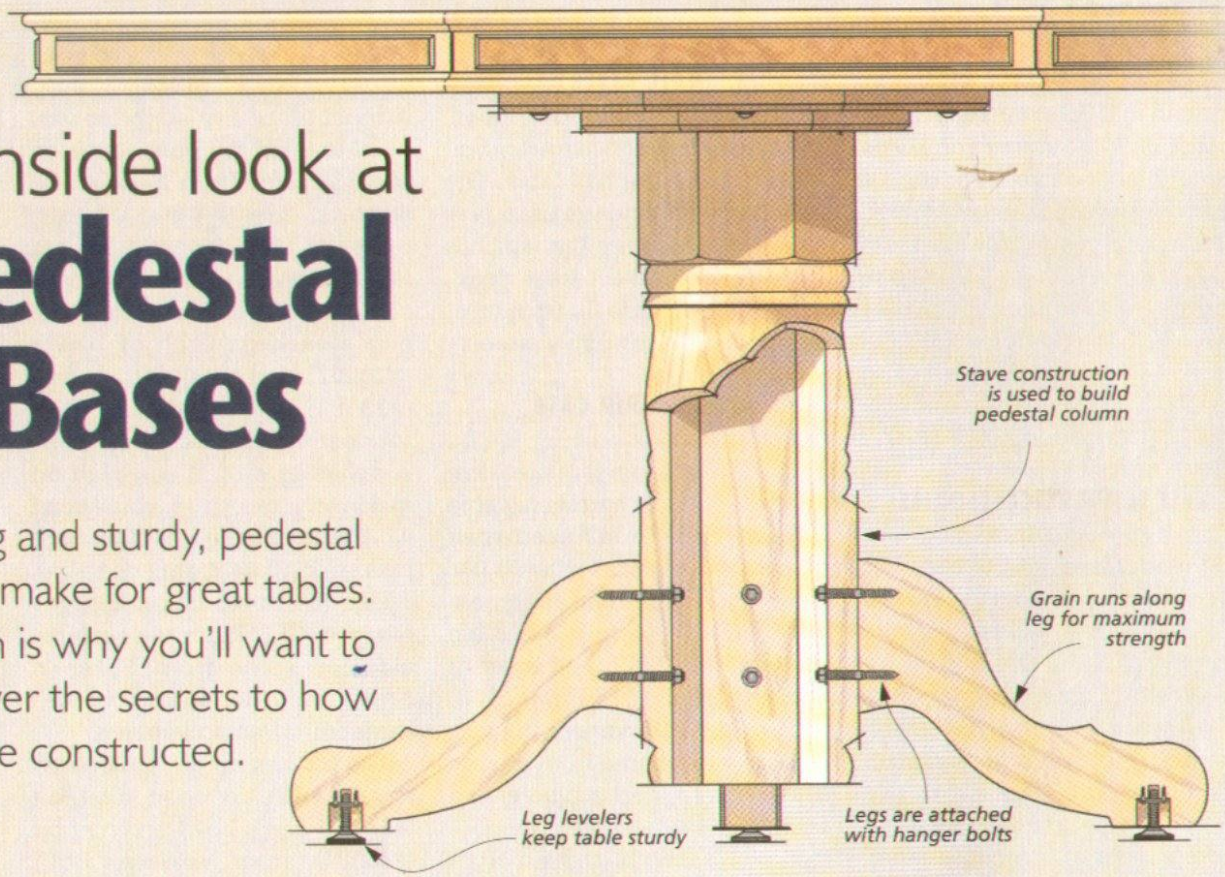

When it came to building the poker table on page 32, we chose to use a pre-made pedestal base. It's quick and easy, and the cost isn't a whole lot more than if you built it yourself. But if you want to make the table out of a wood other than red oak, you might want to try making your own pedestal base. And if that's the case, there are a few things worth knowing about pedestal base construction.

There are two parts to a traditional pedestal base — the column and the legs. Since the column is the more challenging of the two to build, let's start there.

COLUMN

If you take a look at the drawing above, the first thing you'll probably notice is that instead of being solid, the column is hollow. That's because it's glued-up out of individual "staves." The edges of these staves are beveled to fit together, creating an eight-sided cylinder.

There are several advantages to using stave construction for the column. For one thing, it uses less wood, so it's lighter. You also don't have to worry about wood movement or shrinkage like you do with solid wood construction. And since the column is hollow inside, the legs can be simply bolted on, like you see in the drawing above.

But one of the biggest benefits to stave construction is that it gives you a better-looking column. Since each side of the column is a separate piece of wood, all you see is face grain. So you get an even grain pattern all around the column.

And because the staves are mitered together at the corners of the octagon, the joint lines are a lot less obvious than if you were to glue up a solid blank. But still, there are some things to keep in

STAVE WIDTH CHART

NOTE: Stave width dimensions are approximate

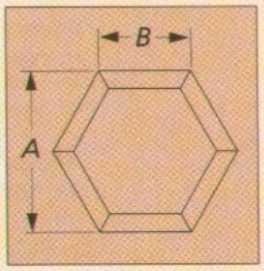

A	B
6"	3 7/16"
8"	4 5/8"
10"	5 3/4"

SIX SIDED PEDESTAL (30° miters)

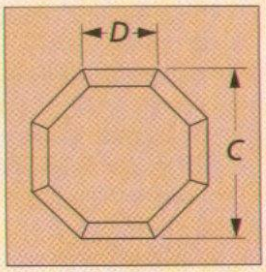

C	D
6"	2 1/2"
8"	3 5/16"
10"	4 1/8"

EIGHT SIDED PEDESTAL (22 1/2° miters)

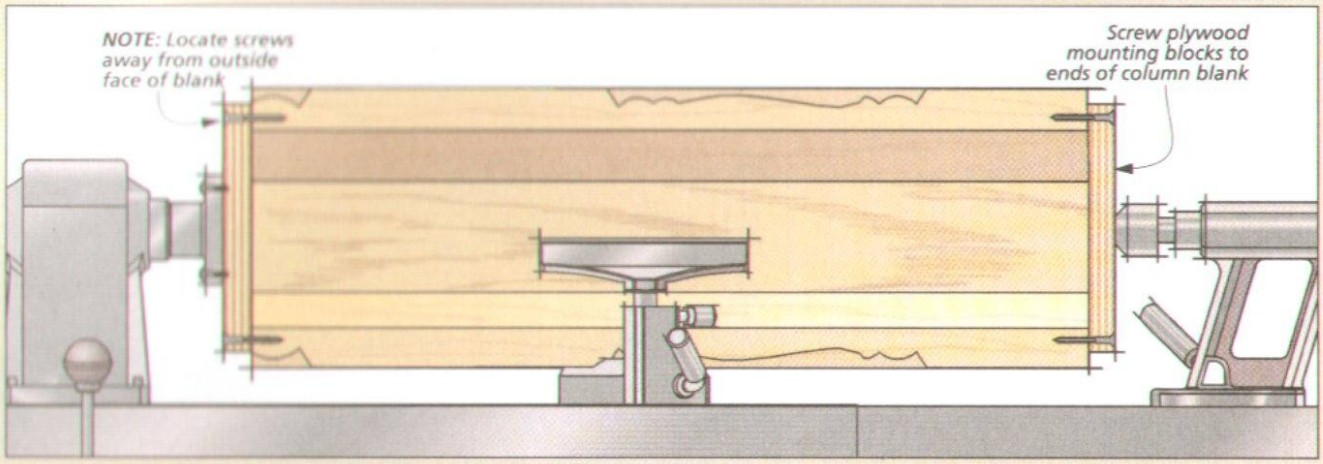

mind when making a column with stave construction.

First, you want to make sure that the stock you use for the staves is thick enough for the profile you have in mind. If it's not, you run the risk of cutting right through the wall of the column while you're turning it. (The column for the poker table is made out of 1"-thick stock.)

Second, in order to accurately size the column, you'll need to determine the width of the individual staves. The chart on the bottom of the opposite page will give you the stave widths for some common sizes of six and eight-sided columns.

TURNING THE COLUMN. When you're ready to actually start turning the column, you'll need some way to mount the blank to your lathe. One way to do this is to cut a couple of plywood blanks to mount to the ends, as you see in the drawing above. Screw these in place to the ends of the column, making sure to locate the screws as close to the inside of the column as possible. This way they'll be clear of the profile you are turning.

Finally, since this is a fairly large-diameter column, you'll want to keep the speed of your lathe at the lower end of the range.

LEGS

Compared to the column, making the legs of the pedestal base is pretty straightforward. Because the legs for the poker table are pretty thick (2¼"), each one is cut from a glued-up blank. Thinner legs can be cut from a single piece of wood. The important thing here is to pay attention to the grain direction when you are laying out the leg on the blank, see drawing below.

Orienting the grain diagonally not only gives you the strongest possible leg, it has a couple of other advantages. First, it doesn't require a wide, large blank. And second, it virtually eliminates any end grain from being visible on the edge of the leg. A small detail, but one I think makes the leg look better.

You can cut the legs out on a band saw and sand them smooth with a drum sander. Then the only thing left is to attach them to the column. Some hanger bolts, nuts, and washers make this pretty easy.

Making a pedestal base from scratch is definitely a challenge. But with a little care, you can end up with a table that not only looks great, but will last for years. W

Woodsmith GO ONLINE EXTRAS

To download patterns for turning the pedestal or making the legs, go to: www.Woodsmith.com

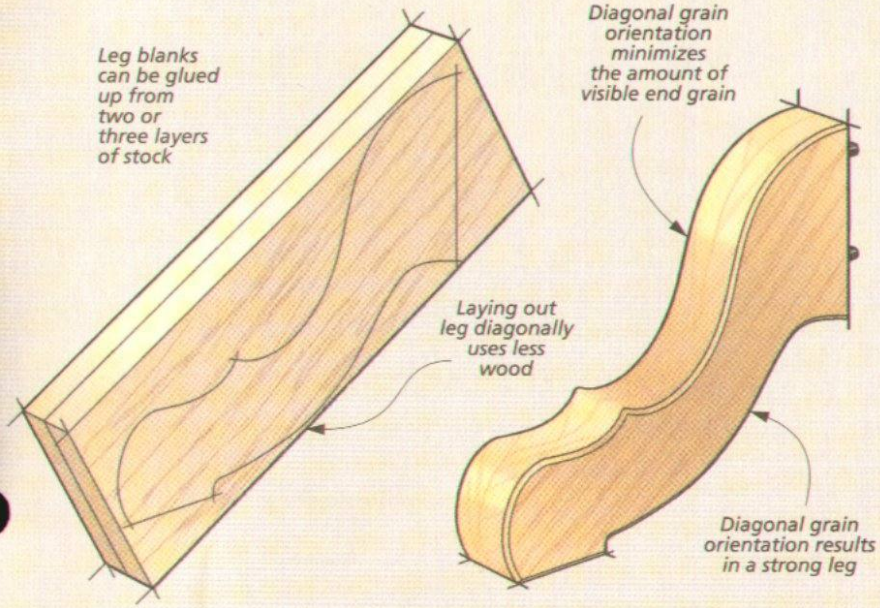

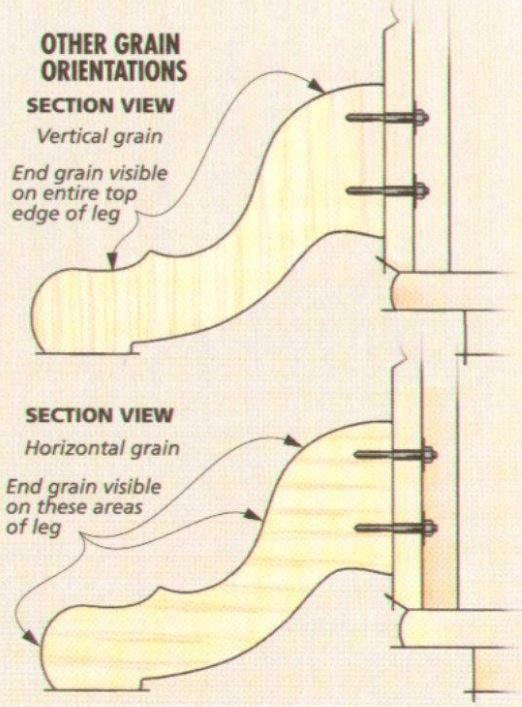

looking inside
Final Details

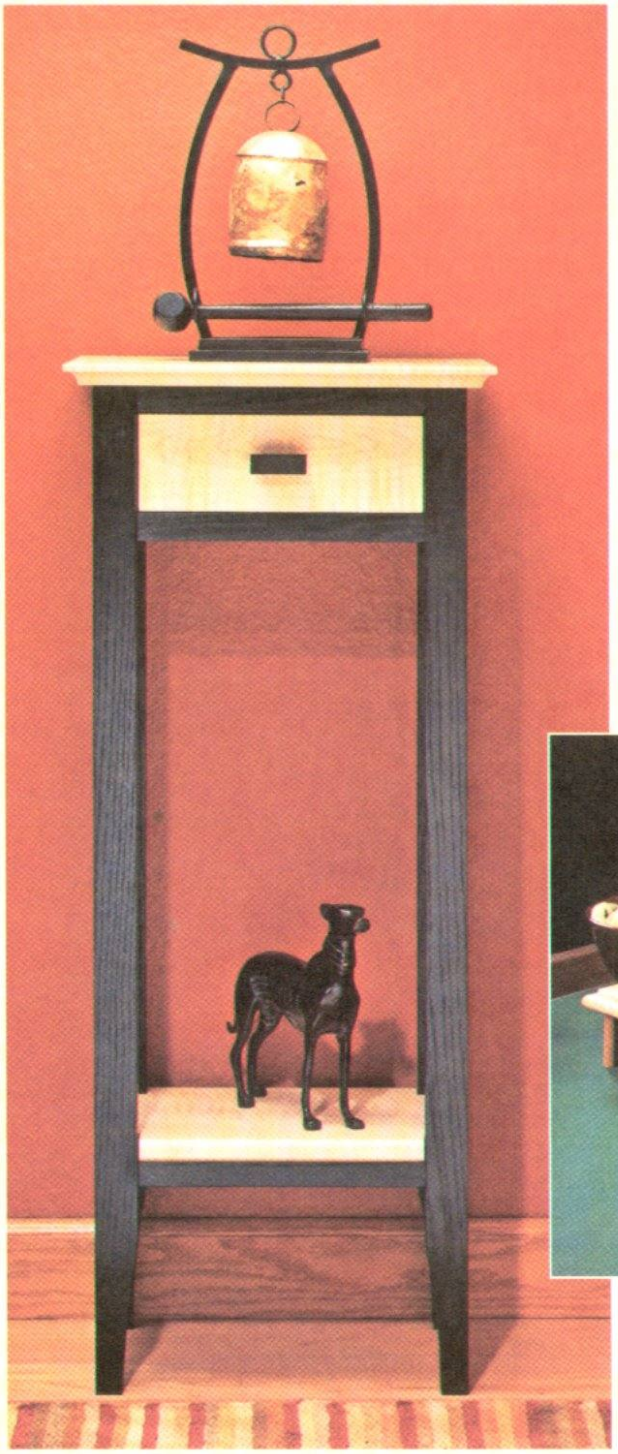

▲ *Display Table.* The contrasting wood in this table is the first thing you notice. But it's the simple construction that makes it quick to build. Instructions start on page 16.

▲ *Optional Wood Cover.* The poker table featured on the cover is bound to see a lot of action on poker night. But you might want to fit it with this wood cover for everyday use. Step-by-step plans begin on page 32.

▲ *Poker Chip Case.* This storage system holds everything you'll need for a friendly game of poker. It features nesting trays, felt-lined chip and card holders, a veneered top, and brass hardware. Detailed plans begin on page 22.

Materials, Supplies, & Cutting Diagram No. 158

Poker Chip Case

A	Case Frame Fronts (4)	3/4 x 1 3/8 - 16 1/4
B	Case Frame Ends (4)	3/4 x 1 3/8 - 10
C	Case Top/Bottom Panels (2)	1/4 ply. - 7 3/4 x 14
D	Cases Sides (4)	1/2 x 2 3/8 - 15
E	Case Top Panel (1)	1/2 x 7 1/2 - 13 3/4
F	Tray Sides (4)	1/4 x 2 1/4 - 14
G	Tray Ends (4)	1/2 x 2 1/4 - 7 11/16
H	Tray Bottoms (2)	1/4 ply. - 7 7/16 x 13 3/4
I	Chip Holders (5)	3/4 MDF - 3 1/2 x 7 3/16
J	Spacers (6)	3/4 x 7/8 - 7 3/16
K	Tray Dividers (2)	1/4 x 7/8 - 7 3/16
L	Filler (1)	7/16 x 2 1/2 - 4 1/2
M	Center Divider (1)	1/4 x 7/8 - 4 1/2
N	Cleats (4)	7/16 x 1/2 - 7 3/16

- (2) 2 1/4"-dia. Brass Table Latches w/Screws
- (4) 1"-dia. Flat Brass Box Feet
- (4) 3 3/4" Brass Bin Pulls w/Screws
- (12) #6 x 1/2" Fh Brass Woodscrews
- (4) 5/16" Table Leaf Alignment Pins

3/4" x 8" - 60" Red Oak (3.3 Bd. Ft.)

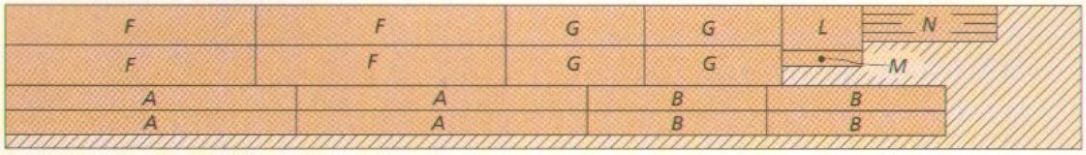

3/4" x 8" - 48" Red Oak (2.7 Bd. Ft.)

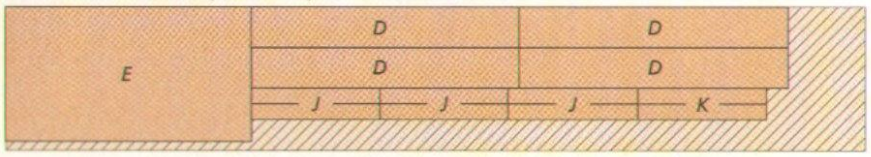

ALSO NEEDED:
One - 24" x 48" sheet 1/4" red oak plywood;
One - 24" x 48" sheet 3/4" MDF

Display Table

A	Legs (8)	3/4 x 1 1/2 - 35
B	Frame Fronts/Backs (6)	3/4 x 1 - 11
C	Frame Sides (6)	3/4 x 1 - 8
D	Cleats (6)	3/4 x 1 - 6 1/2
E	Side Panels (2)	3/4 x 4 - 6 3/8
F	Back Panel (1)	3/4 x 4 - 10 1/4
G	Drawer Guides (2)	1/2 x 1/2 - 6 1/2
H	Drawer Front (1)	3/4 x 3 3/8 - 9 7/8
I	Drawer Back (1)	1/2 x 3 3/8 - 9 3/8
J	Drawer Sides (2)	1/2 x 3 3/8 - 7
K	Drawer Bottom (1)	1/4 hdbd. - 6 1/2 x 9 3/8
L	Drawer Pull (1)	3/4 x 1- 2
M	Top (1)	3/4 x 11 1/2 - 15
N	Shelf (1)	3/4 x 9 - 12 1/2

- (8) #8 x 1 1/4" Fh Woodscrews
- (6) #6 x 5/8" Fh Woodscrews
- (12) #8 x 2 1/2" Rh Woodscrews

3/4" x 7" - 72" Red Oak (3.5 Bd. Ft.)

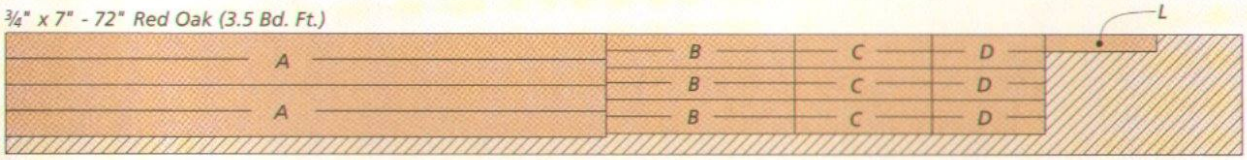

3/4" x 5" - 72" Curly Maple (2.5 Bd. Ft.)

3/4" x 5" - 36" Curly Maple (1.3 Bd. Ft.)

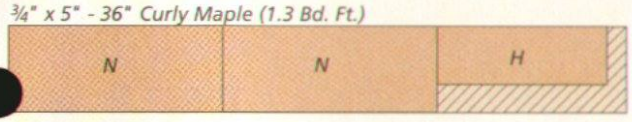

Also needed:
One 24" x 48" sheet of hardboard

1/2" x 4" - 36" Maple (1 Sq. Ft.)

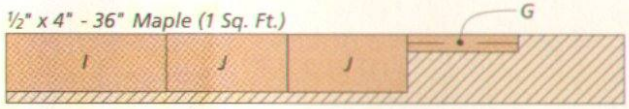

Materials, Supplies, & Cutting Diagram No. 158

Classic Oak Poker Table

A	Subtop (1)	3/4" MDF - 42 x 42
B	Spacer Ring Segments (8)	3/4" MDF - 2 x 18 rgh.
C	Tray Ring Segments (8)	3/4" MDF - 6 7/16 x 23 rgh.
D	Tray Ring Edging (8)	3/4 x 1 1/8 - 23 rgh.
E	Inner Facings (8)	1/4 x 2 1/4 - 17 5/8
F	Coaster Top Blanks (16)	3/4 x 3 7/16 - 6
G	Coaster Sides (16)	1/2 x 1 1/2 - 4 3/16
H	Coaster Bottom Blanks (8)	1/4" hdbd. - 5 1/4 x 6
I	Outer Facings (8)	5/8 x 1 1/2 - 23 rgh.
J	Cap Molding (8)	3/4 x 1 1/8 - 23 rgh.
K	Lower Mounting Plate (1)	3/4 MDF - 12 x 12
L	Upper Mounting Plate (1)	3/4 MDF - 18 x 18
M	Felt Top Panel (1)	3/4" MDF - 41 7/8 x 41 7/8
N	Tray Liners (8)	1/4" hdbd. x 4 1/16 - 14 rgh.

- (1) Oak Pedestal Column
- (1) Oak Pedestal Leg Set (Four Legs)
- (1) Natural Cork Roll
- (1) Poker Table Felt - 55" x 108"
- (8) Planetree Burl Veneer 3"x 24" rgh.
- (4) 5/16"-18 Flanged T-nuts
- (8) 5/16"-18 Brass Threaded Inserts
- (12) 5/16"-18 x 1 1/4 Rh Machine Screws w/Washers
- (40) #8 x 1 1/4 Fh Woodscrews

3/4" x 8" - 96" Red Oak (5.3 Bd. Ft.)

3/4" x 8" - 72" Red Oak (4.0 Bd. Ft.)

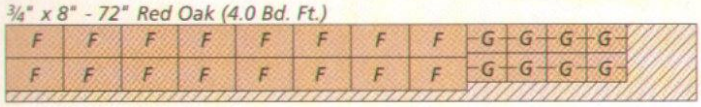

1/4" - 48" x 24" Hardboard

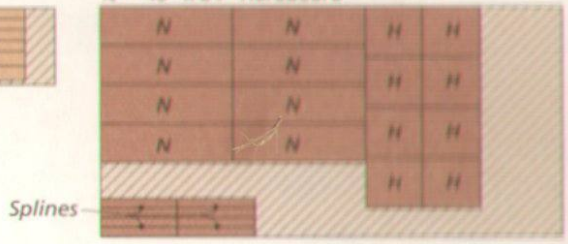

3/4" x 5 1/2" - 72" Red Oak (2.8 Bd. Ft.)

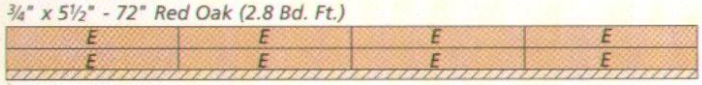

3/4" - 48" x 96" MDF

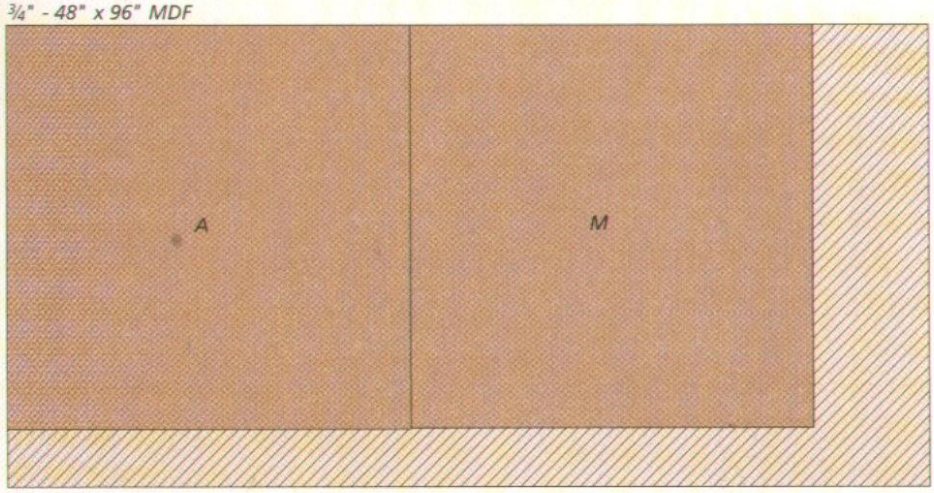

3/4" - 48" x 48" MDF

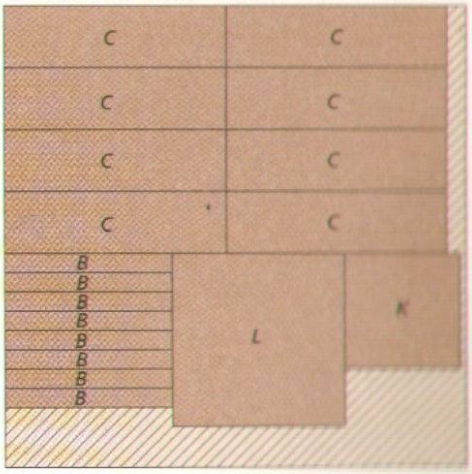

Optional Wood Cover

A	Center Panel Halves (2)	3/4 ply. - 23 5/8 x 47 1/2
B	Center Panel Edging (2)	1/8 x 3/4 - 47 1/2
C	Border Long Sections (6)	3/4 x 3 1/4 - 22 3/8
D	Border Short Sections (4)	3/4 x 3 1/4 - 11 3/16
E	Positioning Cleats (4)	3/4 x 2 - 4 1/16

- (4) 5/16" Table Leaf Alignment Pins
- (8) #8 x 1 1/4" Rh Woodscrews w/Washers

3/4" x 8 1/2" - 96" Red Oak (5.7 Bd. Ft.)

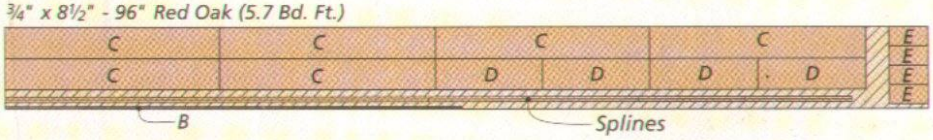
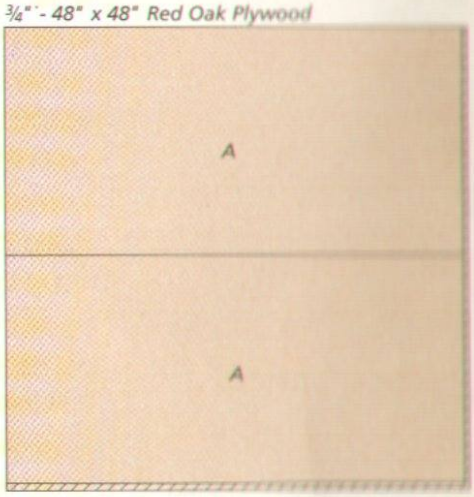
3/4" - 48" x 48" Red Oak Plywood